INDUSTRIAL WASHER EXTRACTORS

HIGH SPIN WASHER EXTRACTORS:

6 kg	33 kg
7 kg	40 kg
10 kg	55 kg
16 kg	120 kg
22 kg	

RIGID MOUNTED WASHER EXTRACTORS:

6 kg	18 kg
7 kg	22 kg
10 kg	27 kg
13 kg	35 kg
16 kg	43 kg

HIGH SPIN HYGIENIC BARRIER WASHER EXTRACTORS:

16 kg	66 kg
26 kg	90 kg
33 kg	140 kg
44 kg	180 kg

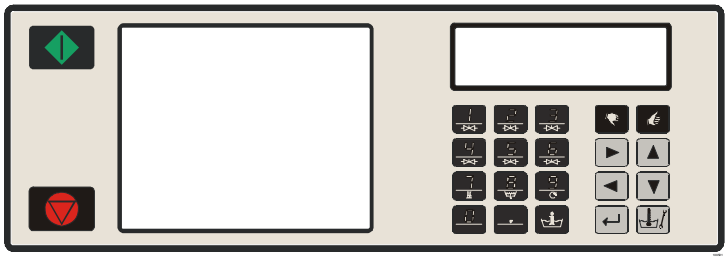

PROGRAMMING MANUAL
FULL CONTROL

100962 G
Publication date: 24 Jun 2008

1. TABLE OF CONTENTS

Publication date: 24 Jun 2008 Page:

1. TABLE OF CONTENTS 1

2. WARNINGS AND SYMBOLS 3

2.1. WARNINGS 3

2.2. SYMBOLS USED 4

3. BASIC DESCRIPTION OF CONTROLS 6

3.1. GENERAL 6

3.2. SPECIFIC 7

3.3. THE CREATION OF A WASH PROGRAM 9

3.4. PROGRAMMING THE FUNCTIONS 11

4. INITIALIZING THE MACHINE 22

4.1 INITIALISATION MENU 22

4.2 CONFIGURATION MENU 28

5. PROGRAMMING 38

5.1 GENERAL 38

5.2. STEP ① : PROGRAM MENU 38

5.3. STEP ② : PROGRAM FUNCTIONS 39

5.4. STEP ③ : PROGRAM STEP FUNCTION 42

5.5. STEP ④ : PROGRAMMING THE WASH PART 44

5.6. STEP ⑤ : PROGRAMMING THE DRAIN STEP 67

6. OPERATION MENU 72

6.1. STARTING UP 72

6.2. SWITCHING ON THE POWER 72

6.3. LOAD THE WASHING MACHINE 72

6.4. PUT SOAP INTO THE SOAPHOPPER 72

6.5. STARTING A WASH PROGRAM 72

6.6. PROGRAMMING A DELAY TIME 73

6.7. ECONOMIC 73

6.8. THE ACTIVE PROGRAM 73

6.9. ADVANCING A WASH PROGRAM 74

6.10. WASH TIME 74

6.11. PROGRAM END 74

6.12. WATER FILL PROCESS 76

6.13. HEATING PROCESS 76

6.14. COOLDOWN FUNCTION 76

6.15. FLUSH FUNCTION 77

6.16. SPRAY FUNCTION 77

6.17. UNBALANCE 77

6.18. PAUSE 77

6.19. STOP 77

6.20. OPEN SOAP BOX 78

6.21. WAIT STATE 78

6.22. HOW TO HANDLE FAILURE MESSAGES 78

6.23. HOW TO HANDLE POWER INTERUPTIONS 79

6.24. SPECIAL FUNCTION BUTTONS 79

6.25. WATER RECYCLING 81

6.26. SOAP BOXES 81

7. PRE-PROGRAMMED PROGRAMS 82

7.1. LEGEND 82
7.2. WASH PROGRAMS 83
❑ Wash program 1: HOT WASH – 90°C 83
❑ Wash program 2: WARM WASH – 60°C 83
❑ Wash program 3: COLORED WASH – 40°C 84
❑ Wash program 4: BRIGHT COLORED WASH – 30°C 84
❑ Wash program 5: WOOLENS – 15°C 85
❑ Wash program 6: LIGHTLY SOILED - HOT WASH - 90°C NO PREWASH 85
❑ Wash program 7: LIGHTLY SOILED - WARM WASH - 60°C NO PREWASH 86
❑ Wash program 8: LIGHTLY SOILED - COLORED WASH - 40°C NO PREWASH 86
❑ Wash program 9: BADLY SOILED – COOLDOWN - COLORED - 90°C 87
❑ Wash program 10: BADLY SOILED – COOLDOWN - WHITE - 90°C 87
❑ Wash program 11: BADLY SOILED – COOLDOWN - 60°C 88
❑ Wash program 12: WHITE CHLORINE BLEACH – 90°C (JAVEL BLEACH) 88
❑ Wash program 13: WHITE OXYGEN BLEACH – 90°C (PEROXY BLEACH) 89
❑ Wash program 14: EXTRACTION - LOW SPEED 89
❑ Wash program 15: EXTRACTION - HIGH SPEED 89
7.3. WASH PROGRAMS FOR X-MACHINES 90
8. TROUBLESHOOTING 91
8.1. DISPLAY MESSAGES 91
8.2. FAULT MESSAGES 91
8.3. HOW TO HANDLE FAULT MESSAGES 92
8.4. OVERVIEW 94
8.5. SERVICE MENU 97
8.6. DIAGNOSTIC PROGRAM 101
8.7. PROBLEM CHECK LIST 105
8.8. EXPLANATION ERROR MESSAGES 106
9. SERVICE INFORMATION 126
9.1. MAINTENANCE 126
9.2. INFORMATION FOR SERVICE 126
9.3. PROGRAMMER CIRCUIT BOARD 127
9.4. INSTRUCTIONS FOR REPLACING THE ELECTRONIC BOARD AND KEYPAD 127
9.5. INSTRUCTIONS FOR INSTALLING NEW SOFTWARE 128
10. SPECIFICATION OF YOUR MACHINE 129
11. INDEX 130

2. WARNINGS AND SYMBOLS

2.1. WARNINGS

BEFORE OPERATING A MACHINE CONTROLLED BY AN ELECTRONIC PROGRAMMER, READ THIS MANUAL. INCORRECT USE CAN RESULT IN SERIOUS INJURIES OR DAMAGE TO THE MACHINE CONTROLS. IGNORING INSTRUCTIONS CAN CAUSE AN INCORRECT MACHINE FUNCTION, WHICH MAY RESULT IN INJURIES OR MACHINE AND/OR LINEN DAMAGES.

– This manual version is an original English version. Without the original version these instructions are not complete. Before installation, operating and maintenance of the machine, read complete instructions thoroughly which means the following manuals: „Programming Manual“, „User‘s Manual“ and „Installation and Maintenance Manual“. Follow these instructions and keep them handy for later use.

– A machine must be installed by following the „Installation and maintenance manual“. Before the first machine start, it must be initialized and tested by a qualified worker. When operating the machine, follow the machine „Users Manual“.

– The electric service line must not be affected by other electrical loading. A nominal voltage, if loaded or not must work in the range ±10% with a maximum permanent frequency deviation of 1% or a short-time one at 2% of a given frequency (50 or 60 Hz). Connecting or starting the machine at an incorrect voltage can damage the programmer.

– The machine must not be exposed to high humidity or extreme high and low temperatures.

– Do not tamper with the controls.

INSTRUCTIONS IN THIS MANUAL DO NOT COVER ALL DANGEROUS SITUATIONS.

IT IS UP TO THE USER TO HANDLE THE MACHINE CAREFULLY.

The manufacturer has the right to change specifications in this manual without prior notice. All the stated information is only for informative purpose and must be considered as general. It is not possible to present all the specific data of the device.

NOTE !!!

EVERY ELECTRONIC BOARD HAS A SERIAL NUMBER AND THE CODE OF THE BOARD (Picture 9.3).

ON THE EPROM MEMORY CHIP ON THE ELECTRONIC BOARD IS A LABEL SPECIFYING THE SOFTWARE NUMBER AND VERSION AND/OR THE DATE OF THE SOFTWARE (Picture 9.3).

THESE DATA, AS WELL AS THE MODEL AND SERIAL NUMBER OF THE MACHINE, MUST BE MENTIONED IN ALL CORRESPONDENCE OR INQUIRIES ADDRESSED TO THE DISTRIBUTOR OR MANUFACTURER.

NOTE !!!

THE “FULL CONTROL“ COMPUTER USED ‘MACHINE TYPE’ CODES TO SELECT THE DIFFERENT PROGRAMMABLE MACHINES EXECUTIONS.

The model number on de machine doesn’t indicate the ‘machine type’ but must be linked with the description of the ‘machine type’ letters.

- **R : Rigid mounted machines (MFR PND)**
- **RF : Rigid mounted inverter driven machines**
- **F : Free standing machines (MFS PND)**
- **FF : Free standing Frequency inverter driven machines (MFS NNA)**
- **X : Non cabinet machines (MFX PND)**
- **XF : Non cabinet Frequency inverter driven machines (MFX NN)**
- **MB : Medical Barrier machines.**

NOTE !!!

IN THE PROGRAMMING MANUAL, SOME PARAGRAPHS ARE ONLY INTENDTED FOR MACHINES WITH FREQUENCY INVERTER CONTROLED MOTOR. THESE ARE RECOGNIZABLE AT THE TEXT PRINTED IN ITALICS ON A PALE GREY BACKGROUND. IF YOUR MACHINE IS NOT A FREQUENCY CONTROLLED MACHINE, YOU SHOULD IGNORE THESE PARAGRAPHS.

2.2. SYMBOLS USED

❑ BUTTONS

OPERATION BUTTONS

- **1 2 3 4 5 6 7 8 9 0**
  - Program number selection buttons

- **START**
  - Starting up a program
  - Advancing the program step by step

- **STOP**
  - Interrupting a program
  - Finishing a program

- **YES**
  - Yes selection

- **NO**
  - No selection

- **ARROW LEFT**
  - Decreasing the sequence time

- **ARROW RIGHT**
  - Increasing the sequence time

- **INFO**
  - shows all available wash programs, program steps and functions

- **SERVICE**
  - shows the states and the total number of cycles of the machine

- **DOT**
  - activates the time delay function

PROGRAM BUTTONS

- **ARROW UP**
  - Selecting the previous menu item

- **ARROW DOWN**
  - Selecting the next menu item

- **ARROW LEFT**
  - Selecting the previous element of a menu item list

- **ARROW RIGHT**
  - Selecting the next element of a menu item list

- **ENTER**
  - Selecting a new menu
  - Confirmation of a new value or list element and going over to the next menu item

- **YES**
  - Yes Selection

- **NO**
  - No Selection

SPECIAL FUNCTION BUTTONS

- **INLET 1 2 3 (4 5 6)**
  - Open the inlet valve

- **HEATING**
  - Activate the heating (if equipped)

- **DRAINAGE**
  - Open the Drain valve

- **SPEED ADJUST**
  - Change the speed value

❑ KEYSWITCH

The keyswitch may be mounted on the front panel, the rear panel or inside the machine.
With the keyswitch you can select „**Run mode**“ or „**Program mode**“

- **RUN MODE** : This is the Normal wash machine operation.
- **PROGRAM MODE** : Only for changing the wash programs and machine settings.

❑ LABELS

On the labels you can find Instructions for the Washing machine Operation and Information about the Wash Programs.

❑ EMERGENCY STOP SWITCH

This emergency stop switch is used by non-coin washer-extractors

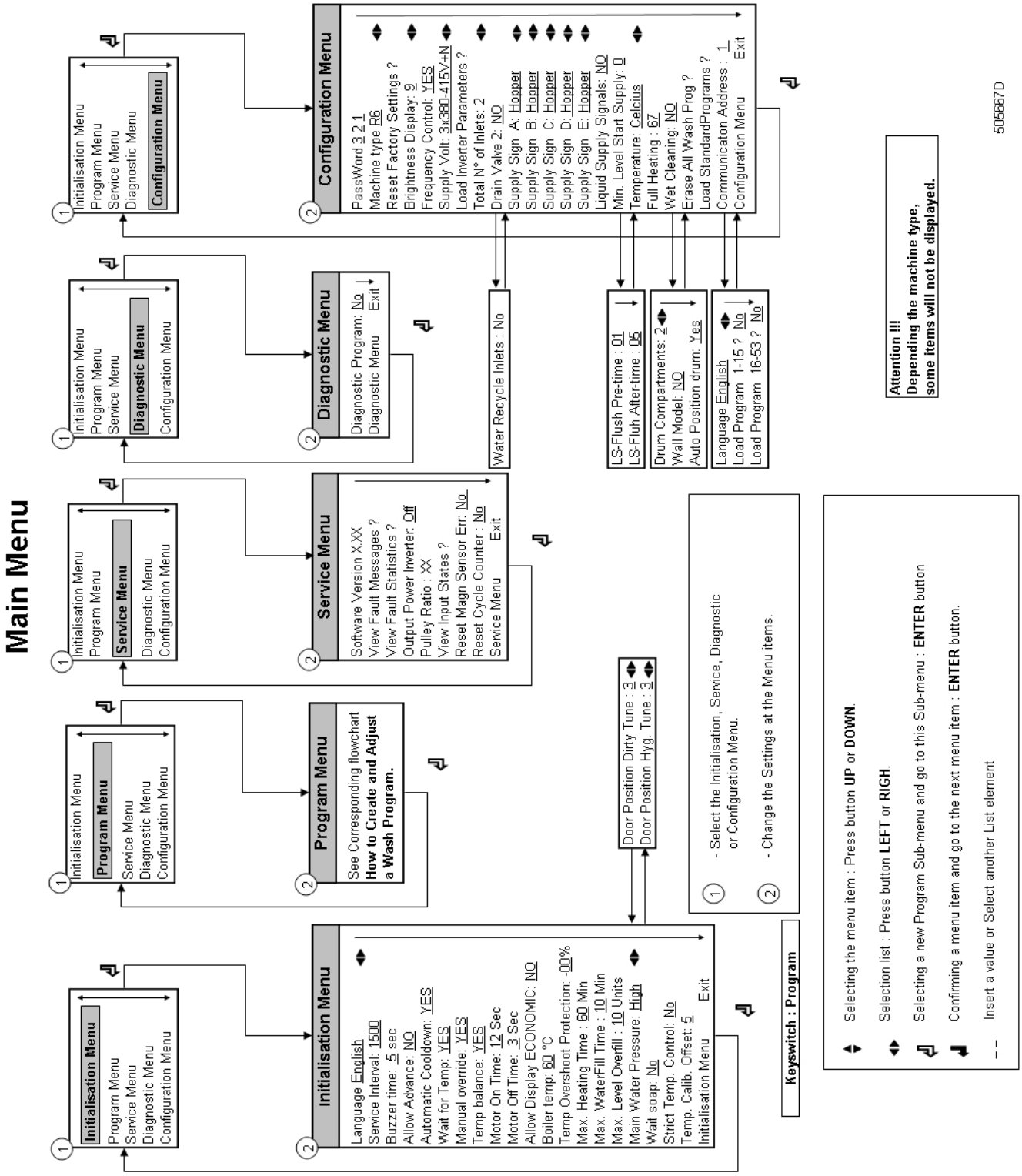
Main Menu
Initialisation Menu
Program Menu
Service Menu
Diagnostic Menu
Configuration Menu
Configuration Menu
PassWord 3 2 1
Machine type R6
Reset Factory Settings ?
Brightness Display: 9
Frequency Control: YES
Supply Volt: 3x380-415V+N
Load Inverter Parameters ?
Total N° of Inlets: 2
Drain Valve 2: NO
Supply Sign A: Hopper
Supply Sign B: Hopper
Supply Sign C: Hopper
Supply Sign D: Hopper
Supply Sign E: Hopper
Liquid Supply Signals: NO
Min. Level Start Supply: 0
Temperature: Celcius
Full Heating : 67
Wet Cleaning: NO
Erase All Wash Prog ?
Load StandardPrograms ?
Communication Address : 1
Configuration Menu Exit
Diagnostic Menu
Diagnostic Program: No
Diagnostic Menu Exit
Water Recycle Inlets : No
LS-Flush Pre-time : 01
LS-Fluh After-time : 05
Drum Compartments: 2
Wall Model: NO
Auto Position drum: Yes
Language English
Load Program 1-15 ? No
Load Program 16-53 ? No
Attention !!!
Depending the machine type,
some items will not be displayed.
Service Menu
Software Version X.XX
View Fault Messages ?
View Fault Statistics ?
Output Power Inverter: Off
Pulley Ratio : XX
View Input States ?
Reset Magn Sensor Err: No
Reset Cycle Counter : No
Service Menu Exit
Program Menu
See Corresponding flowchart
How to Create and Adjust
a Wash Program.
Door Position Dirty Tune : 3
Door Position Hyg. Tune : 3
- Select the Initialisation, Service, Diagnostic
or Configuration Menu.
- Change the Settings at the Menu items.
Initialisation Menu
Language English
Service Interval: 1500
Buzzer time: 5 sec
Allow Advance: NO
Automatic Cooldown: YES
Wait for Temp: YES
Manual override: YES
Temp balance: YES
Motor On Time: 12 Sec
Motor Off Time: 3 Sec
Allow Display ECONOMIC: NO
Boiler temp: 60 °C
Temp Overshoot Protection: -00%
Max. Heating Time : 60 Min
Max. WaterFill Time : 10 Min
Max. Level Overfill : 10 Units
Main Water Pressure: High
Wait soap: No
Strict Temp. Control: No
Temp. Calib. Offset: 5
Initialisation Menu Exit
Keyswitch : Program
Selecting the menu item : Press button UP or DOWN.
Selection list : Press button LEFT or RIGH.
Selecting a new Program Sub-menu and go to this Sub-menu : ENTER button
Confirming a menu item and go to the next menu item : ENTER button.
Insert a value or Select another List element
505667D

3. BASIC DESCRIPTION OF CONTROLS

3.1. GENERAL

❑ THE CONTROL OFFERS :

- 99 programmable programs (including 15 pre-programmed ones)
- Control of signal voltages for external pumps or liquid supply dispensers
- Redistribution of the garments to avoid imbalance
- Automatic temperature balance at the water fill process
- Setting the machine options and configuration
- Multiple languages can be selected (one at a time)

❑ IN OPERATION THE FOLLOWING DATA IS DISPLAYED :

- The selected program
- The active wash step
- The remaining program time
- The name of the sequence
- Indication of wait for heat (if selected)
- The water level and temperature can be viewed
- Diagnostic messages

❑ THE OPERATION MENU :

- A program can be manually Shortened, Extended, Stopped.
- A pause can be programmed
- Special function buttons allow direct operation of selected components (water valves, ect.)
- Program overview
- Service information

❑ THE HARDWARE AND SOFTWARE OF THE FULL CONTROL WASH COMPUTER :

- Easy operation by a comprehensive keypad
- The hardware contains 1 electronic board
  (Old wash computer MCB 40 = 2 piece execution : Micro-Controller Board (display) & Power Board)
- The wash machine control software is implemented in a EPROM that can be easily replaced
- The Wash Programs are kept in EEPROM memory (non-volitile memory)

3.2. SPECIFIC

❑ The PROGRAM Menu is designated for :

- the creation of a specific **name** for a wash program.
- the creation and implementation of a **new** wash program step by step.
- **editing** a wash program step by step.
- **inserting** and **deleting** steps in the wash program.
- **copying** a wash program.
- **deleting** a wash program.
- inspecting the wash program by the **view** function.

❑ The CONFIGURATION Menu is designated for :

- the selection of the **machine type**.
- **loading** the default **factory settings** for the CONFIGURATION and INITIALISATION menu.
- the selection of the **Brightness** of the **display**.
- the selection of the **power supply voltage** of the washing machine.
- **loading** the frequency **inverter parameters**.
- **erasing** all the programmed **wash programs** (reset Wash program EEPROM memory).
- **loading** the **standard wash programs**.
- the selection of the **number** of wash machine **water supply inlets**.
- the selection of a **second drain valve**. (water recycling system)
- the selection if the supply has to function as **hopper** or **liquid**.
- the selection if **external liquid pumps** have been connected to the washing machine.
- the selection if the manifold **LS-flush** water inlet has to function.
- the selection if the **temperature** must be displayed in degrees **Celsius** or degrees **Fahrenheit**.
- the selection **Full Heating**.
- the selection **Low Water Pressure**
- the selection of **Wetcleaning** (very low programmable water levels).
- the selection of the **minimum level start supplies**.
- the selection of the number of **compartments** drum for **big MB-machines**.

❑ The INITIALISATION Menu is designated for :

- the selection of the displayed **Language**.
- programming the **Service due** value.
- the selection of the **Buzzer time** interval.
- the selection of the **Advance** function.
- the selection of the **Wait for temperature** function.
- the selection of the **Manual override** function.
- the selection of the **Temperature balance** function.
- programming the **Default Motor On** and **Off times** for reversing wash action.
- the selection of the **Automatic Cool-down** function.
- the selection of the **Show Economic** function.
- programming the **Boiler temperature** (hot water supply).
- programming the **Temperature Overshoot Protection** value.
- programming the **Maximum Heating time** value.
- programming the **Maximum fill time** value.
- programming the **Maximum Level overfill** value.

❑ The SERVICE Menu is designated for :

- the inspection of the **error messages** log register and the list with statistics.
- activating the **power** of the frequency inverter.
- the inspection of the functionality of the electric **input** signals.
- resetting the **Cycle counter**.

❑ The DIAGNOSTIC Menu **is designated for starting up a diagnostic program**.

99 Wash Programs – 99 Steps

Program 1	Program 2	Program 3	. . .	Program 99
Name Prog	Name Prog	Name Prog		Name Prog
Step 1	**Step 1**	**Step 1**	. . .	**Step 1**
Wash Sequence	Wash Sequence	Wash Sequence		Wash Sequence
Drain/ Extraction Sequence	Drain/ Extraction Sequence	Drain/ Extraction Sequence		Drain/ Extraction Sequence
Step 2	**Step 2**	. . .		**Step 2**
Wash Sequence	Wash Sequence			Wash Sequence
Drain/ Extraction Sequence	Drain/ Extraction Sequence			Drain/ Extraction Sequence
Step 3	. . .			**Step 3**
Wash Sequence				Wash Sequence
Drain/ Extraction Sequence				Drain/ Extraction Sequence
. . .				. . .
Step 99				**Step 99**
Wash Sequence				Wash Sequence
Drain/ Extraction Sequence				Drain/ Extraction Sequence
Tumble Sequence	**Tumble Sequence**	**Tumble Sequence**	. . .	**Tumble Sequence**

Available Wash Sequences : Prewash, Wash, Cooldown, Rinse, Final Rinse, Soak, Flush, Spray, No Wash

Available Drain/Extraction Sequences : Drain, Extract, Low Extract, High Extract, No Drain, Static Drain

3.3. THE CREATION OF A WASH PROGRAM

- **a Wash Program is built up step by step.**
- **each step always consists of a Wash sequence and a Drain/Extraction sequence.**

❑ Top soap hopper and Front soap hopper washing machines :

101008

- The Full Control Wash Computer is designated for 2 Main groups of washing machines:

- The washing machines with Top Soap Hopper

101009

- The washing machines with Front Soap Hopper

- Depending upon the machine type, more or less machine functions are available.

❑ Programming the Wash sequence :

- First choose the type of Wash sequence.

Washing machine with Top Soap Hopper	Washing machine with Front (or side) Soap Hopper
PREWASH	**WASH**
WASH	**COOLDOWN**
COOLDOWN	**RINSE**
RINSE	**SOAK**
FINAL RINSE	**SPRAY**
FLUSH	**No WASH**
SOAK	
SPRAY	
No WASH	

- Then program all the related functions of the sequence.

The available functions are :

- **Temperature**
- **Water Level**
- **Water Inlet Valves**
- **The Wash Speed**
- **The Reversing Interval times**
- **Supplies**
- **Sequence Time (length of step)**
- **Drain valve 1 – 2**
- **Pause Signal**
- **Spray 1**
- **Spray 2**

- You will notice that each step has default settings.
  This feature is very helpful as most of the newly created programs will not require changes to be made to the suggested values.

❑ Programming the Drain sequence :

- After programming the Wash sequence, next program the Drain/Extraction sequence.

Washing Machines with 1 motor	Washing Machines with 2 motors
◆ **DRAIN**	◆ **DRAIN**
◆ **EXTRACTION**	◆ **LOW EXTRACTION**
◆ **No DRAIN**	◆ **HIGH EXTRACTION**
◆ **Static DRAIN**	◆ **No DRAIN**
	◆ **Static DRAIN**

- Then program all the related functions of the Drain/Extraction sequence.

  The available functions are :

  - **Sequence Time** (length of step)
  - **Speed**
  - **Drain valve 1 – 2**

- As you will notice it's also possible to skip a sequence between two other sequences by programming **No WASH** or **No Drain**.

Example : The No drain sequence should be programmed between a wash and a cool-down sequence.

⚠ **ATTENTION !!!**
A MORE DETAILED EXPLANATION FOR THE SPECIFIC SEQUENCES CAN BE FOUND IN CHAPTER 5.

❑ The Tumble sequence :

- The wash cycle will always end with the Tumble sequence.
- The tumble sequence takes 30 Seconds, then the program is finished and the door can be opened.
- **The Tumble sequence cannot be changed**.

3.4. PROGRAMMING THE FUNCTIONS

❑ Limits

- To ensure the correct functionality of the washing machine you have to program values within certain limits.
- If you program a value that falls below the minimal or above the maximal programmable limit then the new value will not be accepted and the previous value stays valid.

❑ Programming the Water Temperature

- Limits
  - Minimum value : 1 °C
  - Maximum value : 45°C for the PREWASH and SOAK and 92°C for the WASH sequence.
  - For RINSE, FINAL RINSE, FLUSH and SPRAY no Temperature can be programmed.

❑ Programming the Inlet valves

- Depending the programmed temperature the inlet valves are suggested.
- While the tub is filling with water, the computer controls the water temperature. By switching on and off the hot and cold water inlet valves the correct water temperature is obtained.
- For machines with a Top Soap Hopper you have to consider that by programming the inlet valves, at the same time, you are also selecting the soap Box at which the soap must be added.
- If you want to program a wash sequence with :
  - Cold Water : only Cold Inlet Valves must be programmed
  - Warm or Hot water : Cold **and** Hot Inlet Valves must be programmed

Top Soap Hopper washing machines : MFR

The cold water inlet valves

Inlet Valve 2	corresponds with	Soap Box A	(Prewash)
Inlet Valve 5	corresponds with	Soap Box B	(Wash)
Inlet Valve 1	corresponds with	Soap Box C	(Final Rinse)
Inlet Valve 6	is a direct Inlet Valve and speeds up the water fill process		

The hot water inlet valves

Inlet Valve 4	corresponds with	Soap Box B	(Wash)
Inlet Valve 3	is a direct inlet Valve and speeds up the water fill process		

How to select inlet valves : EXAMPLE

For a Prewash :	Programmable temperature:	1 - 45°C
	Inlet Valve 2 (cold)	Soap box A
	+ Inlet Valve 3 (hot) and/or 6 (cold)	Direct Inlets
For a Wash :	Programmable temperature:	1 - 92°C
	Inlet Valve 4 (hot) and/or 5 (cold)	Soap box B
	+ Inlet Valve 3 (hot) and/or 6 (cold)	Direct Inlets
For a Rinse :	Inlet valves 2 + 5 + 6 (cold)	No Soap is added
For a Final Rinse :	Inlet valve 1 (cold hard) (or cold soft)	Soap box C
	+ Inlet valve 6 (cold soft)	only if No cold hard water for Inlet 1

⚠ **ATTENTION !!!**
FOR MACHINES WITH LIQUID SUPPLY PUMPS, DIRECT WATER INLET VALVES 3 OR 6 MUST BE PROGRAMMED BECAUSE THE LIQUID IS ADDED AT THE DIRECT WATER INLET CHANNEL. DEPENDING THE WASHING MACHINE EXECUTION, WATER INLET VALVE 1 WILL FUNCTION WITH COLD WATER.
FOR WASHING MACHINES WITH WATER RECYCLING, THE WATER RECYCLING SUPPLY MUST BE CONNECTED TO INLET VALVE 2 OR 5

Front or Side Soap Hopper washing machines :

The cold water inlet valves

Inlet Valve 1 : Cold Hard Water or Recycled Water
Inlet Valve 2 : Cold Soft Water

The hot water inlet valve

Inlet Valve 3 : Warm Soft Water

⚠ **ATTENTION !!!**
FOR A FRONT SOAP HOPPER WASHING MACHINE, TO ADD SOAP, THE SUPPLIES MUST BE PROGRAMMED.

❑ Programming the water level

– Water level Limits

- See table 3.4 A and 3.4 B as these values are different for each machine type.
- Minimum value : above the heating elements and the temperature sensor
- Maximum value : below the overflow outlet

– Normal Low Level, Normal High Level

- The Normal Low Level is recommended for the PREWASH, WASH and SOAK sequences.
- The Normal High Level is recommended for the RINSE and FINAL RINSE Sequences.
- At the FLUSH sequence, you can't program a water level as the water will escape by the overflow opening.
- At the COOLDOWN sequence, the Full Control Wash Computer makes use of a low water level and is draining the water automatically.
- At the Spray sequence, the Drain valve stays open.

– Economic water level

- If you prefer a wash cycle with an economic water level :
  - you can select "Show ECONOMIC" in the initialisation menu to make use of the standard ECONOMIC function. Then at the start of each wash cycle, the question **ECONOMIC?** will be posed. If you select ECONOMIC then the program will function with 20% units less water.
  - or you may make dedicated programs with a water level 20% units below the Normal water level.

– Wet Cleaning selection Configuration menu

- It's possible to program a level below default minimum programmable level. (see table)
- The extra heating is disabled by the software if Wet Cleaning has been selected.

⚠ **ATTENTION !!!**
FOR WOOLENS AND OTHER DELICATE LINEN A NORMAL HIGH WATER LEVEL IS RECOMMENDED. THE ECONOMIC FUNCTION SHOULD ONLY BE USED FOR LIGHTLY SOILED AND/OR SMALLER VOLUMES OF LAUNDRY. IN OTHER CASES, THE PROGRAM WILL GIVE POOR WASHING QUALITY.

Programmable water level units related to the amount of water in the tub

Programmed water LEVEL (Water level height in units)	RF6	RF7	RF10	RF13	RF16	RF18	RF22	RF27	RF35
units									
18									
19	12 ℓ	13 ℓ	14 ℓ	19 ℓ					
20	13 ℓ	14 ℓ	16 ℓ	21 ℓ					
21	① 14 ℓ	① 15 ℓ	① 19 ℓ	23 ℓ					
22	15 ℓ	16 ℓ	22 ℓ	25 ℓ					
23	② 17 ℓ	18 ℓ	25 ℓ	① 28 ℓ	21 ℓ				
24	**③ 18 ℓ**	② 20 ℓ	② 28 ℓ	31 ℓ	24 ℓ	31 ℓ	39 ℓ		61 ℓ
25	19 ℓ	**③ 22 ℓ**	**③ 31 ℓ**	34 ℓ	27 ℓ	35 ℓ	43 ℓ		① 67 ℓ
26	21 ℓ	24 ℓ	34 ℓ	② 37 ℓ	30 ℓ	① 38 ℓ	① 47 ℓ	① 55 ℓ	73 ℓ
27	**④ 23 ℓ**	26 ℓ	36 ℓ	**③ 40 ℓ**	① 32 ℓ	41 ℓ	51 ℓ	60 ℓ	78 ℓ
28	25 ℓ	**④ 29 ℓ**	**④ 38 ℓ**	43 ℓ	35 ℓ	44 ℓ	55 ℓ	65 ℓ	83 ℓ
29	27 ℓ	32 ℓ	41 ℓ	46 ℓ	39 ℓ	48 ℓ	60 ℓ	70 ℓ	89 ℓ
30	28 ℓ	34 ℓ	43 ℓ	49 ℓ	42 ℓ	② 52 ℓ	② 64 ℓ	②76 ℓ	② 95 ℓ
31	30 ℓ	36 ℓ	45 ℓ	**④ 52 ℓ**	② 45 ℓ	**③ 56 ℓ**	**③ 68 ℓ**	**③ 81 ℓ**	**③ 101 ℓ**
32	32 ℓ	38 ℓ	48 ℓ	55 ℓ	**③ 48 ℓ**	60 ℓ	72 ℓ	86 ℓ	107 ℓ
33	33 ℓ	40 ℓ	51 ℓ	58 ℓ	50 ℓ	63 ℓ	76 ℓ	91 ℓ	113 ℓ
34	35 ℓ	42 ℓ	54 ℓ	60 ℓ	53 ℓ	67 ℓ	81 ℓ	96 ℓ	119 ℓ
35	37 ℓ	45 ℓ	57 ℓ	63 ℓ	56 ℓ	**④ 71 ℓ**	**④ 86 ℓ**	101 ℓ	125 ℓ
36	39 ℓ	47 ℓ	59 ℓ	66 ℓ	59 ℓ	75 ℓ	91 ℓ	**④ 106 ℓ**	**④ 131 ℓ**
37	41 ℓ	49 ℓ	61 ℓ	69 ℓ	**④ 63 ℓ**	79 ℓ	96 ℓ	111 ℓ	137 ℓ
38	43 ℓ	51 ℓ	64 ℓ	72 ℓ	67 ℓ	83 ℓ	101 ℓ	116 ℓ	144 ℓ
39	45 ℓ	53 ℓ	66 ℓ	76 ℓ	70 ℓ	87 ℓ	106 ℓ	121 ℓ	150 ℓ
40	47 ℓ	55 ℓ	68 ℓ	79 ℓ	73 ℓ	91 ℓ	111 ℓ	127 ℓ	157 ℓ
41				83 ℓ	77 ℓ	96 ℓ	116 ℓ	132 ℓ	164 ℓ
42				86 ℓ	80 ℓ	100 ℓ	121 ℓ	137 ℓ	170 ℓ
43				89 ℓ	83 ℓ	104 ℓ	126 ℓ	142 ℓ	177 ℓ
44				92 ℓ	87 ℓ	108 ℓ	131 ℓ	148 ℓ	184 ℓ
45				95 ℓ	90 ℓ	113 ℓ	136 ℓ	153 ℓ	192 ℓ
46					94 ℓ	117 ℓ	141 ℓ	159 ℓ	198 ℓ
47					98 ℓ	121 ℓ	146 ℓ	164 ℓ	204 ℓ
48					101 ℓ	125 ℓ	151 ℓ	170 ℓ	210 ℓ
49					104 ℓ	129 ℓ	156 ℓ	175 ℓ	216 ℓ
50					107 ℓ	133 ℓ	161 ℓ	181 ℓ	223 ℓ
51					110 ℓ		166 ℓ	187 ℓ	230 ℓ
52					113 ℓ		170 ℓ	192 ℓ	
53					117 ℓ		175 ℓ	198 ℓ	
54					120 ℓ		179 ℓ	203 ℓ	
55					124 ℓ		184 ℓ	208 ℓ	
56					128 ℓ		189 ℓ	214 ℓ	
57					131 ℓ		194 ℓ	220 ℓ	
58					134 ℓ		199 ℓ	225 ℓ	
59					138 ℓ		204 ℓ	231 ℓ	
60					142 ℓ		209 ℓ	236 ℓ	

① Economic Low Level ② Economic High Level ③ Normal Low Level ④ Normal High Level

Programmable water level units related to the amount of water in the tub

Machine type		FF6	FF7	FF10	FF16	FF22
Programmed water LEVEL (Water level height in units)	units					
	18	11 ℓ	12 ℓ	13 ℓ		
	19	12 ℓ	13 ℓ	14 ℓ		
	20	13 ℓ	14 ℓ	15 ℓ	19 ℓ	
	21	① 14 ℓ	① 15 ℓ	① 17 ℓ	22 ℓ	
	22	16 ℓ	17 ℓ	20 ℓ	25 ℓ	
	23	② 17 ℓ	18 ℓ	23 ℓ	28 ℓ	
	24	**③ 18 ℓ**	② 20 ℓ	25 ℓ	① 31 ℓ	
	25	20 ℓ	**③ 22 ℓ**	② 28 ℓ	34 ℓ	
	26	22 ℓ	24 ℓ	**③ 31 ℓ**	37 ℓ	
	27	**④ 24 ℓ**	26 ℓ	33 ℓ	40 ℓ	
	28	26 ℓ	**④ 28 ℓ**	36 ℓ	43 ℓ	29 ℓ
	29	28 ℓ	31 ℓ	**④ 38 ℓ**	② 46 ℓ	33 ℓ
	30	30 ℓ	33 ℓ	40 ℓ	**③ 49 ℓ**	37 ℓ
	31	32 ℓ	35 ℓ	43 ℓ	53 ℓ	① 41 ℓ
	32	33 ℓ	37 ℓ	46 ℓ	57 ℓ	45 ℓ
	33	35 ℓ	39 ℓ	48 ℓ	60 ℓ	49 ℓ
	34	37 ℓ	41 ℓ	50 ℓ	63 ℓ	53 ℓ
	35	38 ℓ	44 ℓ	53 ℓ	**④ 67 ℓ**	57 ℓ
	36	40 ℓ	46 ℓ	55 ℓ	70 ℓ	② 61 ℓ
	37	42 ℓ	48 ℓ	58 ℓ	74 ℓ	**③ 66 ℓ**
	38	43 ℓ	51 ℓ	61 ℓ	78 ℓ	71 ℓ
	39	45 ℓ	53 ℓ	63 ℓ	81 ℓ	75 ℓ
	40	47 ℓ	55 ℓ	65 ℓ	84 ℓ	79 ℓ
	41				88 ℓ	83 ℓ
	42				91 ℓ	**④ 87 ℓ**
	43				95 ℓ	91 ℓ
	44				99 ℓ	95 ℓ
	45				103 ℓ	100 ℓ
	46				107 ℓ	105 ℓ
	47				111 ℓ	110 ℓ
	48				114 ℓ	114 ℓ
	49				118 ℓ	119 ℓ
	50				122 ℓ	124 ℓ
	51				124 ℓ	129 ℓ
	52				127 ℓ	134 ℓ
	53					140 ℓ
	54					145 ℓ
	55					150 ℓ
	56					155 ℓ
	57					160 ℓ
	58					165 ℓ
	59					170 ℓ
	60					175 ℓ

① Economic Low Level ② Economic High Level ③ Normal Low Level ④ Normal High Level

Programmable water level units related to the amount of water in the tub

Machine type	FF33	FF40	FF55	XF22	XF35	XF43	MB16	MB26	MB33	MB44	MB66
Programmed water LEVEL (Water level height in units)											
units											
28				31 ℓ	48 ℓ	48 ℓ					
29				34 ℓ	52 ℓ	52 ℓ					
30				37 ℓ	56 ℓ	56 ℓ	30 ℓ	32 ℓ	30 ℓ	59 ℓ	97 ℓ
31				41 ℓ	60 ℓ	61 ℓ	33 ℓ	36 ℓ	34 ℓ	65 ℓ	105 ℓ
32				① 45 ℓ	64 ℓ	66 ℓ	36 ℓ	40 ℓ	38 ℓ	71 ℓ	113 ℓ
33				49 ℓ	① 68 ℓ	72 ℓ	① 39 ℓ	44 ℓ	43 ℓ	77 ℓ	① 123 ℓ
34				53 ℓ	72 ℓ	79 ℓ	42 ℓ	48 ℓ	48 ℓ	① 83 ℓ	133 ℓ
35				58 ℓ	77 ℓ	① 86 ℓ	45 ℓ	① 52 ℓ	53 ℓ	90 ℓ	144 ℓ
36				② 62 ℓ	82 ℓ	91 ℓ	49 ℓ	57 ℓ	① 59 ℓ	96 ℓ	153 ℓ
37				**③ 66 ℓ**	87 ℓ	97 ℓ	53 ℓ	62 ℓ	65 ℓ	102 ℓ	163 ℓ
38				70 ℓ	92 ℓ	103 ℓ	② 57 ℓ	67 ℓ	70 ℓ	109 ℓ	173 ℓ
39				73 ℓ	② 97 ℓ	109 ℓ	**③ 61 ℓ**	② 72 ℓ	75 ℓ	116 ℓ	② 184 ℓ
40	51 ℓ	66 ℓ	70 ℓ	77 ℓ	**③ 103 ℓ**	116 ℓ	65 ℓ	**③ 77 ℓ**	80 ℓ	② 124 ℓ	**③ 196 ℓ**
41	55 ℓ	70 ℓ	76 ℓ	81 ℓ	109 ℓ	② 123 ℓ	70 ℓ	82 ℓ	86 ℓ	**③ 132 ℓ**	208 ℓ
42	59 ℓ	74 ℓ	82 ℓ	**④ 85 ℓ**	113 ℓ	**③ 128 ℓ**	75 ℓ	87 ℓ	② 91 ℓ	140 ℓ	220 ℓ
43	63 ℓ	① 78 ℓ	88 ℓ	90 ℓ	117 ℓ	134 ℓ	**④ 80 ℓ**	92 ℓ	**③ 95 ℓ**	148 ℓ	234 ℓ
44	① 67 ℓ	83 ℓ	95 ℓ	95 ℓ	122 ℓ	140 ℓ	85 ℓ	98 ℓ	102 ℓ	157 ℓ	246 ℓ
45	70 ℓ	88 ℓ	① 101 ℓ	99 ℓ	127 ℓ	146 ℓ	90 ℓ	**④ 105 ℓ**	107 ℓ	167 ℓ	**④ 259 ℓ**
46	74 ℓ	93 ℓ	107 ℓ	104 ℓ	132 ℓ	153 ℓ	95 ℓ	112 ℓ	115 ℓ	**④ 177 ℓ**	272 ℓ
47	78 ℓ	99 ℓ	115 ℓ	109 ℓ	137 ℓ	160 ℓ	100 ℓ	119 ℓ	**④ 123 ℓ**	188 ℓ	286 ℓ
48	83 ℓ	105 ℓ	122 ℓ	113 ℓ	**④ 142 ℓ**	167 ℓ	105 ℓ	124 ℓ	131 ℓ	196 ℓ	299 ℓ
49	88 ℓ	② 111 ℓ	130 ℓ	118 ℓ	147 ℓ	**④ 175 ℓ**	112 ℓ	129 ℓ	140 ℓ	204 ℓ	312 ℓ
50	② 93 ℓ	**③ 118 ℓ**	138 ℓ	123 ℓ	152 ℓ	182 ℓ	119 ℓ	134 ℓ	147 ℓ	212 ℓ	325 ℓ
51	**③ 97 ℓ**	123 ℓ	144 ℓ	128 ℓ	159 ℓ	189 ℓ	126 ℓ	140 ℓ	156 ℓ	221 ℓ	339 ℓ
52	101 ℓ	128 ℓ	② 150 ℓ	133 ℓ	166 ℓ	196 ℓ	133 ℓ	146 ℓ	163 ℓ	230 ℓ	354 ℓ
53	105 ℓ	133 ℓ	**③ 156 ℓ**	138 ℓ	173 ℓ	203 ℓ	140 ℓ	153 ℓ	171 ℓ	239 ℓ	368 ℓ
54	109 ℓ	139 ℓ	164 ℓ	142 ℓ	178 ℓ	210 ℓ	147 ℓ	161 ℓ	179 ℓ	247 ℓ	379 ℓ
55	114 ℓ	145 ℓ	172 ℓ	147 ℓ	183 ℓ	217 ℓ	154 ℓ	170 ℓ	188 ℓ	255 ℓ	390 ℓ
56	119 ℓ	152 ℓ	181 ℓ	152 ℓ	189 ℓ	224 ℓ	161 ℓ	179 ℓ	197 ℓ	264 ℓ	402 ℓ
57	123 ℓ	**④ 158 ℓ**	188 ℓ	156 ℓ	194 ℓ	230 ℓ	168 ℓ	185 ℓ	206 ℓ	274 ℓ	417 ℓ
58	127 ℓ	164 ℓ	195 ℓ	161 ℓ	200 ℓ	237 ℓ	175 ℓ	192 ℓ	215 ℓ	284 ℓ	432 ℓ
59	**④ 132 ℓ**	171 ℓ	**④ 203 ℓ**	166 ℓ	206 ℓ	244 ℓ	182 ℓ	199 ℓ	225 ℓ	294 ℓ	448 ℓ
60	137 ℓ	175 ℓ	210 ℓ	171 ℓ	211 ℓ	249 ℓ	189 ℓ	207 ℓ	234 ℓ	302 ℓ	465 ℓ
61	142 ℓ	179 ℓ	218 ℓ	177 ℓ	217 ℓ	255 ℓ	197 ℓ	215 ℓ	243 ℓ	310 ℓ	483 ℓ
62	148 ℓ	184 ℓ	226 ℓ	183 ℓ	223 ℓ	261 ℓ	205 ℓ	224 ℓ	253 ℓ	319 ℓ	501 ℓ
63	153 ℓ	191 ℓ	233 ℓ	187 ℓ	228 ℓ	268 ℓ	213 ℓ	231 ℓ	262 ℓ	328 ℓ	517 ℓ
64	158 ℓ	198 ℓ	240 ℓ	191 ℓ	233 ℓ	275 ℓ	221 ℓ	238 ℓ	271 ℓ	338 ℓ	533 ℓ
65	163 ℓ	205 ℓ	248 ℓ	196 ℓ	238 ℓ	283 ℓ	228 ℓ	245 ℓ	280 ℓ	348 ℓ	550 ℓ
66	168 ℓ	211 ℓ	256 ℓ								
67	173 ℓ	217 ℓ	265 ℓ								
68	179 ℓ	224 ℓ	274 ℓ								
69	184 ℓ	229 ℓ	280 ℓ								
70	189 ℓ	234 ℓ	287 ℓ								
71	195 ℓ	239 ℓ	294 ℓ								
72	200 ℓ	246 ℓ	302 ℓ								
73	206 ℓ	253 ℓ	310 ℓ								
74	212 ℓ	261 ℓ	318 ℓ								
75	216 ℓ	266 ℓ	326 ℓ								
76	220 ℓ	272 ℓ	334 ℓ								
77	225 ℓ	278 ℓ	343 ℓ								
78	230 ℓ	282 ℓ	350 ℓ								
79	235 ℓ	287 ℓ	358 ℓ								
80	240 ℓ	292 ℓ	366 ℓ								

① Economic Low Level ② Economic High Level ③ Normal Low Level ④ Normal High Level

Programmable water level units related to the amount of water in the tub

Machine type		FF120	MB90	MB140	MB180
Programmed water LEVEL (Water level height in units)	units	litres	litres	litres	litres
	17		143 ℓ		
	18		154 ℓ		
	19		165 ℓ		
	20		① 176 ℓ		
	21		185 ℓ		
	22	141 ℓ	196 ℓ	287 ℓ	294 ℓ
	23	150 ℓ	207 ℓ	① 301 ℓ	309 ℓ
	24	159 ℓ	217 ℓ	317 ℓ	325 ℓ
	25	169 ℓ	228 ℓ	331 ℓ	341 ℓ
	26	180 ℓ	② 239 ℓ	345 ℓ	357 ℓ
	27	191 ℓ	**③ 249 ℓ**	361 ℓ	① 373 ℓ
	28	203 ℓ	258 ℓ	② 377 ℓ	389 ℓ
	29	214 ℓ	269 ℓ	**③ 392 ℓ**	405 ℓ
	30	226 ℓ	**④ 279 ℓ**	408 ℓ	421 ℓ
	31	① 237 ℓ	290 ℓ	424 ℓ	437 ℓ
	32	249 ℓ	300 ℓ	**④ 440 ℓ**	454 ℓ
	33	260 ℓ	311 ℓ	456 ℓ	② 471 ℓ
	34	272 ℓ	323 ℓ	472 ℓ	**③ 489 ℓ**
	35	284 ℓ	334 ℓ	488 ℓ	507 ℓ
	36	296 ℓ	345 ℓ	504 ℓ	526 ℓ
	37	② 308 ℓ	357 ℓ	521 ℓ	**④ 545 ℓ**
	38	**③ 320 ℓ**	371 ℓ	538 ℓ	564 ℓ
	39	332 ℓ	387 ℓ	555 ℓ	584 ℓ
	40	344 ℓ	405 ℓ	574 ℓ	604 ℓ
	41	**④ 356 ℓ**	418 ℓ	592 ℓ	625 ℓ
	42	368 ℓ	431 ℓ	610 ℓ	646 ℓ
	43	380 ℓ	444 ℓ	630 ℓ	667 ℓ
	44	393 ℓ	457 ℓ	650 ℓ	689 ℓ
	45	405 ℓ	470 ℓ	670 ℓ	711 ℓ
	46	418 ℓ	483 ℓ	690 ℓ	733 ℓ
	47	430 ℓ	496 ℓ	710 ℓ	755 ℓ
	48	443 ℓ	509 ℓ	729 ℓ	777 ℓ
	49	455 ℓ	523 ℓ	748 ℓ	799 ℓ
	50	468 ℓ	537 ℓ	767 ℓ	821 ℓ
	51	480 ℓ	551 ℓ	785 ℓ	843 ℓ
	52	493 ℓ	565 ℓ	803 ℓ	864 ℓ
	53	506 ℓ	579 ℓ	823 ℓ	885 ℓ
	54	519 ℓ	593 ℓ	842 ℓ	906 ℓ
	55	532 ℓ	607 ℓ	862 ℓ	927 ℓ
	56	545 ℓ	622 ℓ	884 ℓ	948 ℓ
	57	558 ℓ	637 ℓ	906 ℓ	969 ℓ
	58	571 ℓ	652 ℓ	928 ℓ	990 ℓ
	59	584 ℓ	667 ℓ	949 ℓ	1010 ℓ
	60	597 ℓ	682 ℓ	971 ℓ	1030 ℓ
	61	610 ℓ	697 ℓ	991 ℓ	1050 ℓ
	62	623 ℓ	712 ℓ	1011 ℓ	1070 ℓ
	63	636 ℓ	727 ℓ	1031 ℓ	1090 ℓ
	64	649 ℓ	742 ℓ	1051 ℓ	1110 ℓ
	65	662 ℓ	757 ℓ	1071 ℓ	1130 ℓ
	66	675 ℓ		1091 ℓ	1150 ℓ
	67	688 ℓ		1109 ℓ	1170 ℓ
	68	702 ℓ		1127 ℓ	1190 ℓ

Table continues on next page

		Programmable water level units related to the amount of water in the tub			
Machine type		FF120	MB90	MB140	MB180
Programmed water LEVEL (Water level height in units)	units	litres	litres	litres	litres
	69	715 ℓ		1145 ℓ	1210 ℓ
	70	729 ℓ		1163 ℓ	1230 ℓ
	71	742 ℓ		1181 ℓ	1250 ℓ
	72	756 ℓ		1199 ℓ	1270 ℓ
	73	769 ℓ		1217 ℓ	1290 ℓ
	74	783 ℓ		1235 ℓ	1310 ℓ
	75	796 ℓ		1253 ℓ	1330 ℓ
	76	810 ℓ		1271 ℓ	1350 ℓ
	77	823 ℓ		1289 ℓ	1370 ℓ
	78	837 ℓ		1307 ℓ	1390 ℓ
	79	850 ℓ		1325 ℓ	1410 ℓ
	80	864 ℓ			
	81	877 ℓ			
	82	891 ℓ			
	83	904 ℓ			
	84	918 ℓ			
	85	931 ℓ			
	86	945 ℓ			
	87	958 ℓ			
	88	972 ℓ			
	89	985 ℓ			
	90	999 ℓ			

① Economic Low Level ② Economic High Level ③ Normal Low Level ④ Normal High Level

Machine type	Minimum programmable level	Normal Low Level Default value	Normal High Level Default value	Maximum programmable level
RF 6	19	24	27	40
RF 7	19	25	28	40
RF 10	19	25	28	40
RF 13	19	27	31	45
RF 16	23	32	37	60
RF 18	24	31	35	50
RF 22	24	31	35	60
RF 27	26	31	36	60
RF 35	24	31	36	50
FF 6	18	24	27	40
FF 7	18	25	28	40
FF 10	18	26	29	40
FF 16	20	30	35	52
FF 22	28	37	42	60
FF 33	40	51	59	80
FF 40	40	50	57	80
FF 55	40	53	59	80
FF 120	22	38	41	90
XF 22	28	37	42	65
XF 35	28	40	48	65
XF 43	28	42	49	65
MB 16	30	40	45	65
MB 26	30	40	45	65
MB 33	30	43	47	65
MB 44	30	41	46	65
MB 66	30	40	45	65
MB 90	17	27	30	65
MB 140	22	29	32	80
MB 180	22	34	37	80

Tab. 3.4.A. Programmable water Level

	Wash Speed			Spin Speed				Low spin Speed
Machine type	**default RPM**	min RPM	max RPM	**default RPM**	min RPM	Blocked frequency	max RPM	default RPM
RF6	**050**	010	060	**570**	95	-	580	350
RF7	**050**	010	060	**570**	95	-	580	350
RF10	**050**	010	060	**570**	95	-	580	350
RF13	**045**	010	055	**515**	85	-	525	350
RF16	**044**	010	050	**440**	85	-	450	350
RF18	**044**	010	050	**495**	85	-	505	350
RF22	**044**	010	050	**440**	85	-	450	350
RF27	**042**	010	050	**480**	75	-	490	350
RF35	**038**	010	045	**500**	75	-	510	350
FF6	**050**	010	060	**980**	95	351-449	999	550
FF7	**050**	010	060	**980**	95	351-449	999	550
FF10	**050**	010	060	**980**	95	351-449	999	550
FF16	**045**	010	055	**950**	85	351-449	980	550
FF22/3	**042**	010	050	**800**	80	351-449	860	550
FF22/5	**042**	010	050	**800**	80	351-449	860	550
FF33	**038**	010	045	**790**	75	351-449	830	550
FF40	**038**	010	045	**790**	75	351-449	830	550
FF55	**038**	010	045	**790**	75	351-449	830	550
FF120	**032**	010	040	**670**	60	150-250	720	550
XF22	**042**	010	050	**730**	80	351-449	750	450
XF35	**038**	010	045	**700**	75	351-449	700	450
XF43	**038**	010	045	**625**	75	351-449	625	450
MB16	**045**	010	055	**940**	75	351-449	960	550
MB26	**045**	010	055	**940**	75	351-449	960	550
MB33	**045**	010	055	**940**	75	351-449	960	550
MB44	**041**	010	050	**880**	70	351-449	915	550
MB66	**041**	010	050	**880**	70	351-449	915	550
MB 90	**036**	010	045	**760**	65	250-380	800	550
MB 140	**033**	010	040	**690**	60	150-280	730	550
MB 180	**032**	010	040	**660**	60	150-280	700	550

Tab. 3.4.B. Speed of machines with frequency inverter.

❑ Programming the Wash Speed

- Standard reversing wash speed is between ≅ 40 and 50 RPM. (≅ Verify exact value at table 3.4.B.)
- For some special applications the drum should only turn very slowly.

- **Speed Limits**
  - The minimum programmable wash speed is 10 RPM.
  - The maximum programmable wash speed is 50 RPM.

❑ Programming Extraction speed

R – RF machines :	Extraction ≅ 450 RPM (MFR)
F & X machines :	Low Extraction ≅ 500 RPM(MFS PND)
	High Extraction ≅ 850 - 1000 RPM (MFX PND - MFS PND)
FF & XF & MB machines :	Extraction ≅ [300 - 350] – [450 – (850) 1000] RPM (MFS NN - MFX NN)

- The speed value is only programmable for machines with inverter controlled motor.
- An Intermediate spin between two sequences should be about ½ of the max spin.
- Between 350 and 450 RPM (≅ Verify exact value at table 3.4.B.) it's not allowed to program a steady speed, as the machine could VIBRATE TOO MUCH.

- **Speed Limits**
  - Check table 3.4.B with the minimum and maximum speed limits. The limits differ depending on the maximum allowed g-force at high spin for each washing machine type.

❑ Programming Supplies

- Up to 4 Supplies can be programmed at the same time in a sequence.
- For Front Soap Hopper washing machines, supplies have to be programmed to add the soap from the hoppers.
- If Liquid soap pumps have been installed on your washing machine, then these pumps will be activated by programming a time value for the corresponding supply signal.
- If a second drain valve has been installed, then there is 1 Liquid pump less that can be programmed.

- **Time Limits**
  - The maximum programmable time is 99 Seconds
  - If the time is 0 Seconds then the supply will NOT be activated at the wash process.

⚠ **ATTENTION !!!**

IF FOR SOME SPECIAL APPLICATION MORE THAN 4 SUPPLIES MUST BE PROGRAMMED IN THE SAME SEQUENCE, THIS CAN BE SOLVED BY PROGRAMMINGTHE SAME SEQUENCE TWICE; ONE AFTER THE OTHER. SPLIT THE WATER LEVEL (SO IT WILL TAKE WATER FOR THE SECOND FILL, say 60%, 100%), STEP TIME, AND THE NUMBER OF SUPPLIES, OVER THE TWO SUBSEQUENT SEQUENCES. PROGRAM A "NO DRAIN" BETWEEN THE TWO SEQUENCES TO AVOID DRAINING THE WATER. SET TEMPERATURE THE SAME FOR BOTH PARTS.

❑ Programming the Motor On and Off times for Reversing

- The standard Reversing Motor On and Off times at Wash speed are 12 Seconds On and 3 Seconds Off.
- For Delicates and Woolens it's recommended to program a gentle wash action with a Reversing On time of 3 Seconds and an Off time of 12 Seconds.

❑ Programming the Sequence time.

- The sequence time starts running after the water level is reached.
- If wait for Temperature has been selected, the sequence time starts only running once the programmed temperature has been reached at the heating process.
- For a Cooldown Sequence, the programmed time corresponds with the time for decreasing the water temperature.

Recommendation :

At least a cooldown of 3 minutes must be programmed. And to avoid the shrinking of the garments, it's recommended to program the time so that the temperature will decrease with about 3°C for each minute.

⚠ **ATTENTION !!!**
FOR A SPRAY SEQUENCE, IF A SUPPLY HAS BEEN PROGRAMMED, THE SEQUENCE TIME CORRESPONDS WITH THE PROGRAMMED SUPPLY TIME.

❑ Signal

- The signal should be programmed when a running wash cycle has to be interrupted.
- The Buzzer will be activated, to alert the operator.
- For most cases, the operator interrupts a program to fill the soap hopper an additional time.
- The program interruption will always occur at the end of a step.

❑ Programming water recycling Inlets and Outlets

Only FS120 & MB machines
Optional feature for which the electrical and water installation in and outside the washing machine must be extended.

- Case 1
  - If in the Configuration menu "Drain Valve 2 : Yes" & "Recycling Inlets : Yes" is selected, it's possible to program 3 extra water inlets in the wash sequences and 3 extra water outlets in the drain-extraction sequences.
  - In the wash sequences it's possible to program 3 extra water supply inlets : 4, 5, 6 dedicated for water recycling. These water inlet valves will function as cold water inlet valves for respectively recycle tanks 1, 2, 3.
  - In the drain-extraction sequences it's possible to program 3 extra outlet valves dedicated for water recycling. Select drain valve 1 if the water must be drained to the sewer and drain valve 2 in combination with outlet valves (selection drain valve : 2>1, 2>2, 2>3) if the water must be pumped to the water recycling tanks respectively tank 1, 2 and 3.
- Case 2
  - If in the Configuration menu "Drain Valve 2 : Yes" & "Recycling Inlets : No" is selected, it's possible to select a second drain valve for water recycling in the drain-extraction sequences.
  - Select drain valve 1 if the water must be drained to the sewer and drain valve 2 if the water must be pumped to the water recycling tank.
  - Water supply Inlet 1 can function as water recycle inlet valve. (Replaces the hard water supply).

4. INITIALIZING THE MACHINE

Initializing the machine goes in four steps:

1. Install the machine mechanically. (See Installation Manual)

Full Control Wash Computer only :

2. Select the machine specific settings in the Configuration Menu.
3. Select the operator specific settings in the Initialisation Menu.
4. Adjust standard Programs or create new Programs at the Program Menu.

⚠ **ATTENTION !!!**
THE INITIALISATION SHOULD BE PERFORMED BY QUALIFIED PERSONNEL ONLY. AN INCORRECT INITIALISATION MAY CAUSE SERIOUS INJURIES AND SERIOUS DAMAGE TO THE MACHINE!

⚠ **ATTENTION !!!**
BEFORE MAKING CHANGES IN THE CONFIGURATION AND INITIALISATION MENU READ THIS MANUAL CAREFULLY.
CHANGES YOU HAVE MADE WILL INFLUENCE THE WASH PROGRAM PROCESSES.
WE RECOMMEND BEFORE MAKING CHANGES TO CAREFULLY WRITE DOWN WHAT THE PREVIOUS SETTINGS WERE.

AS THE FULL CONTROL WASH COMPUTER IS USED FOR A WHOLE RANGE OF WASHING MACHINES, AFTER THE INSTALLATION OF A NEW FULL CONTROL WASH COMPUTER, YOU NEED TO PROGRAM MACHINE SPECIFIC SETTINGS INTO THE CONFIGURATION MENU. See paragraph 4.2.

AT THE INSTALLATION OF NEW SOFTWARE, AFTER LOADING THE FACTORY SETTINGS (see paragraph 4.2) YOU NEED TO CHECK THE DEFAULT SETTINGS ONE BY ONE TO FIND OUT IF THEY CORRESPOND WITH THE SETUP AS YOU PREFER.

THE CONFIGURATION AND INITIALISATION OF THE WASHING MACHINE HAS BEEN DONE AT THE FACTORY. FOR THE CREATION OF NEW PROGRAMS, NO CHANGES HAVE TO BE MADE IN THE INITIALISATION OR CONFIGURATION MENUS.

4.1 INITIALISATION MENU

❑ HOW TO GET INTO THE INITIALISATION MENU

The initialisation menu can only be accessed when the machine is in standby (the power is switched on, but no program is started).

- **SELECT Process**_ _ is displayed.
- Turn the key switch to the Program Mode.
- The Main menu is now available.
- The Initialisation Menu is the first Menu and is displayed immediately.

Main Menu
Initialisation

- Press the **ENTER** button to make your selection.
- Now you will see the first menu item.
- By pressing the ▼ **ARROW DOWN** or ▲ **UP** button you can see the menu items one by one.

I:Language
English

- Select the preferred Language from the list by pressing the **ARROW LEFT** or **RIGHT** button.
- English is the default setting.
- Press the **ENTER** button to confirm.

English | French | Spanish | German | Dutch | Czech | Polish | Finnish | Danish | Slovenian | Italian | ...

I:Service
Intervall : 9999

- Insert the number of cycles at which a maintenance is required. See Maintenance Manual.
- the default setting is :
  - 9999 for machines with top soap dispenser.
  - 3000 for machines with front soap dispenser.
- Press the **ENTER** button to confirm.

I:Buzzer
Time : 5 Sec

- Insert the buzzer time. At the End of the Wash cycle, when the message Unload is displayed, the buzzer will function for the programmed time.
- 5 Seconds is the default value.
- Press the **ENTER** button to confirm.
- The buzzer will function each time the attention of the operator is needed.
- The programmable Buzzer time interval is not applicable in the case of error messages.

I:Allow
Advance : Yes

- With the Advance function you can Skip a Sequence or extend & decrease the time of a Sequence.
- Yes is the default value. (No for MB-machines)
- Yes : the Advance function is enabled.
  No : the Advance function is disabled.
- Press the **ENTER** button to confirm.

I:Automatic
Cooldown : Yes

- To avoid mechanical temperature shock and to extend the life time of your washing machine, after a hot wash, cold water is injected bit by bit. As a result at the end of the hot wash, the temperature will be lowered to about 65°C.
- The automatic cool-down function will only be functional if a hot wash with a temperature above 65°C has been programmed and if a cold water inlet valve is programmed in the next step. When a Cool-down sequence has been programmed, the automatic cool-down will not function.
- The automatic cool-down differs from a normal cool-down sequence. The purpose of a cool-down sequence is to

avoid the shrinking of the garments. (Takes more time)
See Chapter 5.

- Yes is the default value.
- Yes : Automatic Cool-down enabled.
  No : Automatic Cool-down disabled.
- Press the **ENTER** button to confirm.

I:Wait for
Temp : Yes

- With the Wait for Temperature function, The Full Control Wash Computer will put the process time on Hold as long as the programmed temperature hasn't been reached. Once the temperature has been reached, the time will be released.
- Yes is the default value.
- Yes : Wait for heat enabled.
  No : Wait for heat disabled.

- Press the **ENTER** button to confirm.

I:Manual
override : Yes

- The operator can interact immediately on the water inlet, drain, heating and spin speed functions.
- By selecting the Manual override function, the special function buttons on the key board will become functional.
- Yes is the default value. (No for MB-machines)
- Yes : Manual override enabled.
  No : Manual override disabled.
- Press the **ENTER** button to confirm.

⚠ **Attention !!!**

The special function buttons will only activate the corresponding Outputs if the safety requirements are fulfilled.

Example : If there is No water in the drum, it will not be possible to switch on the heating by pressing the special function button "HEATING"

I:Temperature
Balance : Yes

- The Full Control Computer will control the water temperature at the water fill process. By switching the cold and hot water inlet valves On and Off, the programmed temperature will be reached at the end of the water fill process.
- For High temperatures extra heating will be required after the fill process.
- For some applications, the automatic temperature control should be switched off. This can be done by disabling the Temperature Balance function.
- Yes is the default value.
- Yes : Temperature balance enabled.

No : Temperature balance disabled.
- Press the **ENTER** button to confirm.

I:Motor On
Time : _ _ Sec

▼

I:Motor Off
Time : _ _ Sec

▼

- For programming the ON-OFF reversing time at wash speed, the default values are 12 Sec ON and 3 Sec OFF. This corresponds with a normal wash action.
  For a gentle wash action, it's recommended to program 3 Sec ON and 12 Sec OFF.
- The purpose of these two items is to suggest the values to avoid that the operator has to insert over and over again the ON-OFF reversing times while programming new wash programs.
- Press the **ENTER** button to confirm.
- **FS120, MB90, MB140, MB180 : 12Sec ON and 5Sec OFF**

I:Allow Display
ECONOMIC : No

▼

- By enabling the "Allow Display ECONOMIC" function : the operator is requested to confirm for each wash program if the program must function with an Economic water level.
- When Economic has been selected at the start of the cycle, the machine will function with 20% units less water than the programmed value.
- A minimum water level will always be respected to avoid that the heating elements are heating without water.
- No is the default value. NO is the suggested value.
- Yes : Allow Display ECONOMIC enabled.
  No : Allow Display ECONOMIC disabled.
- Press the **ENTER** button to confirm.

I:Boiler
temp.: 60°C

▼

- The Full Control Computer controls the water temperature at the water fill process. By programming the boiler temperature an optimum process is obtained.
- The Boiler temperature corresponds with the hot water supply.
- 60°C is the default value.
- Make a selection between 50°C, 60°C, 70°C or 80°C.
- Press the **ENTER** button to confirm.

I:Temp Overshoot
Protection: -00%

▼

- It can occur that the temperature will raise above the programmed value when the machine is heating very fast. (Steam Heating) To avoid this, you can insert a percentage at which the heating will be switched Off before reaching the programmed temperature.
- It takes some time before the hot and cold water is mixed

and a stable water temperature is obtained. If the programmed water temperature is not reached within 30 seconds, the heating will be started again.

- The default value is 0%. (The function is switched Off)
- A value between 0% and 30% can be programmed.
- Press the **ENTER** button to confirm.

I:Max. Heating
Time : 60 Min

- The Full Control wash computer will generate a diagnostic message when the water hasn't reached the programmed temperature in 60 Minutes.
- 60 Minutes is the default value.
- Some operators want to adjust this time. A value between 10 and 99 minutes can be selected.
- Press the **ENTER** button to confirm.

⚠ **Attention !**
If 99 minutes has been selected, NO error message will be generated at all, even if the heating time exceeds 99 minutes.
The machine will only stop heating when the programmed temperature has been reached.

I:Max. WaterFill
Time : 10 Min

- The Full Control wash computer will generate a diagnostic message when the water hasn't reached the programmed level in 10 Minutes.
- 10 Minutes is the default value. (15 Minutes F120)
- Some operators want to adjust this time. A value between 5 and 99 minutes can be selected.
- Press the **ENTER** button to confirm.

⚠ **Attention !**
If 99 minutes has been selected, NO error message will be generated at all, even if the fill time exceeds 99 minutes.
The machine will only stop filling when the programmed water level has been reached.

I:Max. level
Overfill : 10

- The Full Control wash computer will generate a diagnostic message when the water has reached the programmed level + 10 units.
- 10 units is the default value.
- Some operators want to adjust this alarm level. A value between 10 and 25 units can be selected.
- Press the **ENTER** button to confirm.

⚠ **Attention !**

It's strongly recommended that the heating power of the steam installation has enough power to heat the bath quickly. Otherwise the tub will be filled with extra water and an error message will occur that the machine takes more then 10 units extra water.

This will also increase the water, energy and supply consumption.

To solve the problem in another way it is possible to reduce the programmed target water level so that also less energy is needed to heat up the bath and with the extra water you will wash with a normal amount of water.

I:Main Water
Pressure : High

▼

- **Only for machines with Front Soap Hopper.**
- If the main water supply pressure is low it can happen that the plastic soap hoppers don't fall at the wash sequence. In this case you must set the selection "Main Water Pressure" : Medium or Low. As a result the main water inlet will get closed before the plastic soap hopper falls down. (If High selected the main water inlet stays open.)
- Select "High, Medium or Low" from the list by pressing the **ARROW LEFT** or **RIGHT** button.
- High is the default value.
- Confirm by pressing the **ENTER** button.

Remark :
The Setting is only applicable if "**Hopper**" is selected for menu-item "Supply Signal A, B, C, D, E" in the Configuration Menu.

I:Wait
Soap : No

▼

Extra Info :

- Only applicable if a central soap dispensing unit is used for multiple machines at the same time.
- When a machine receives liquid soap then the other machines have to wait until the soap sequence is finished. The machine that waits at it's liquid soap sequence receives an On Hold Signal from the central soap dispensing unit. While the machine is waiting, on the display appears the message "Wait Soap". When the On Hold Signal dissapears, then the machine receives the liquid soap and continues the wash cycle.
- No is the default value.
- Yes : Wait for Soap enabled.
  No : Wait for Soap disabled.
- Confirm by pressing the ENTER button.

I:Strict Temp.
Control : No

Extra Info :

- Only for Hygienic washing machine applications.
- If Strict Temperature Control is selected, the machine will wash with the programmed temperature as minimum hysteresis value.
  This will result in a water temperature as close as possible to the programmed temperature value.
- No is the default value.
- Yes : Strict Temperature Control enabled.
  No : Strict Temperature Control disabled.

- Confirm by pressing the ENTER button.

I:Temp. Calib.
Offset : 5

Extra Info :

- Only for Hygienic washing machine applications.
- Temperature Sensor Calibration Offset is a tool to adjust the measured value of the Temperature sensor.
- If there is a difference between the temperature measured in the bath and a reference temperature sensor, the difference between both sensors can be compensated.
- 5 is the default value.
- Limits are between 0 and 10.

- Confirm by pressing the ENTER button.

I:Door Position
Dirty Tune : 3

I:Door Position
Hyg. Tune : 3

- **Only for MB90 – 140 – 180.**
- The Full Control wash computer positions the drum automatically.
- Depending the preferences of the operator it is possible to adjust the angle that the drum makes with the outer door opening to make loading or unloading more easily.
- You can select a value for the Dirty and for the Hygienic side of the machine.
- 3 is the default value.
- The value can be set between 0 - 6.
- Press the **ENTER** button to confirm

I:Initialisation
Menu Exit

- You can leave the Initialisation Menu by pressing the **ENTER** button.

⚠ **Attention !**
With the ARROW UP button you can go back to a previous menu item.

4.2 CONFIGURATION MENU

This electronic managing system has been specially constructed for a wide range of washing machines. For that reason it must be individually set up with important parameters for various machine types. Basic machine adjusting is made in the factory.

⚠ **WARNING !**
ONLY A QUALIFIED TECHNICIAN SHOULD CHANGE THE CONFIGURATION SET UP. AN INCORRECT CONFIGURATION CAN CAUSE INJURIES AND SERIOUS MACHINE DAMAGE.

❑ HOW TO GET INTO THE CONFIGURATION MENU

The configuration menu can only be accessed when the machine is in standby (the power is switched on, but no program is started).

1. **SELECT Process**_ _ is displayed.
   Turn the key switch to the program mode.
   The Main menu is now available.
   Press the **ARROW DOWN** button to select the Configuration Menu.

Main Menu
Configuration

Press the **ENTER** button to make your selection.
For the Configuration Menu a Pass-Word is required.

Pass Word _ _ _

Insert 3 2 1 and Press the **ENTER** button
Now you will see the first menu item.
By pressing the **ARROW DOWN** or **UP** button you can see the menu items one by one.

C:Machine type
R6

▼

- By pressing the **ARROW LEFT** or **ARROW RIGHT** button you can select the machine type.
- Check the Machine data plate at the back side of the washing machine.
- Press the **ENTER** button to confirm.
- As a result you will be asked if you are sure about your selection.
  C: Change Machine type ? No
- Press the **YES** and the **ENTER** button to confirm once more.
- F22/3= F22 Top soap hopper, F22/5= F22 Front soap hopper

R6 | R7 | R10 | R16 | R22 | R35 | F6 | F7 | F10 | F16 | F22/3 | F22/5 | F33 | F40 | F55 | F120 | X22 | X35 | X43 | MB26 | MB33 | MB44 | MB66 |

⚠ **ATTENTION !!!**
BE SURE THAT YOU WANT TO ERASE THE OLD SETTINGS, AS THEY CAN'T BE RECAPTURED. CHANGING THE MACHINE TYPE SHOULD ONLY OCCUR WHEN A NEW FULL CONTROL WASH COMPUTER IS INSTALLED.

⚠ **ATTENTION !!!**
BE SURE THAT YOU HAVE SELECTED THE CORRECT MACHINE TYPE, OTHERWISE THE MACHINE WILL NOT FUNCTION PROPERLY.

⚠ **ATTENTION !!!**
BY CHANGING THE MACHINE TYPE THE WASH PROGRAM'S KEPT IN THE EEPROM MEMORY ARE NOT CHANGED.
AFTER CHANGING THE WASH MACHINE TYPE IT'S RECOMMENDED TO ERASE THE PROGRAM MEMORY AND LOAD THE STANDARD WASH PROGRAM'S AGAIN.
THE WASH PROGRAM SETTINGS DIFFER FOR EACH MACHINE TYPE.
⚠ **ATTENTION !!!**
SELECTING RESET FACTORY IS RECOMMENCED IF A NEW MACHINE TYPE HAS BEEN SELECTED. THIS WILL ENSURE THAT ALL THE DEFAULT SETTINGS OF THE NEW MACHINE TYPE ARE LOADED.

C:Reset Factory
Settings?

- All the Initialisation and Configuration Menu settings will be cleared and the default Factory settings will be re-installed.
- This function should only be used at the initialisation of a new Full Control Wash Computer.
- Select Yes or No and confirm by pressing the **ENTER** button.
- By selecting YES, a new request for confirmation is displayed **C: Delete old settings ? No**
- Press the **YES** and **ENTER** button to confirm once more.

C:Brightness
Display : 9

- You can control the brightness of the display or the angle at which you have an optimal contrast by programming a value between 1 and 20.
- The default value is 9.
- By pressing the **ARROW LEFT** or **RIGHT** button, you can adjust the value. Press the **ENTER** button to confirm.

C:Frequency
Control: Yes

- *If the machine functions with a frequency inverter controlled motor, put the selection on **YES**.*
- *Press the **ENTER** button to confirm.*

C:Supply Voltage:
3 x 380 – 415 V + N

- *For machines with frequency inverter controlled motor the Full Wash Control Computer must know the applied Supply Voltage of the washing machine.*
- *This value can be found at the machine data plate at the back side of the washing machine.*
- *Make sure that you insert the correct Voltage Supply value because otherwise the Mitsubishi Inverter will not function properly.*
- *Confirm by pressing the **ENTER** button.*

ATTENTION !!!

The Selection TTL is only for Mitsubishi inverters Type :

FR-A024-S0.4K - S2.2K-EC and FR-A044-0.4K - 3.7K-EC

➔ *For these inverters you don't have to select the Supply Voltage of the washing machine.*

➔ ***You have to select the list element TTL.***

From October 2000, these inverters have been replaced by inverters from the E500 Series (Current) that do NOT function with TTL communication anymore.

3 x 380 – 415 V + N | 1 x 220 – 240 V | 3 x 220 – 240 V | 3 x 380 – 480 V (N) | 1 x 208 – 240 V | 3 x 208 – 240 V | TTL

C:Load Inverter Parameters? Yes

▼

Loading the Mitsubishi Frequency Inverter Parameters is an advanced feature.

- *These parameters ensure that the Inverter – Motor combination will function properly on your washing machine.*
- *Therefore you have to make sure that the Machine Type and Voltage Supply corresponds with the data plate at the backside of the machine.*
- *Confirm by pressing the **ENTER** button.*
- *As a result you will be asked if you are sure about your selection. **C: Delete old settings ? No***
- *Press the **Yes** and **ENTER** button to confirm once more.*

C:Total N° of Inlets: 2

▼

2 | 3

- A washing machine can be delivered with 2 or 3 water inlet supplies.
- A machine with 2 water inlet supplies functions with:
  - soft warm water
  - soft cold water
- A machine with 3 water inlet supplies functions with:
  - soft warm water
  - soft cold water
  - hard or recycled cold water
- Depending this selection other inlet valves will be suggested at the final rinse sequence.
- Depending this selection other inlet valves will be programmed when the standard programs are loaded.
- The number of inlets must be selected by the **ARROW LEFT** or **RIGHT** button.
- Confirm by pressing the **ENTER** button.

C:Drain
Valve 2: No

- Some machines function with water recovery and are equipped with a second drain valve.
- If this second drain valve is a Normal Closed drain valve then, drain valve 2 must be Selected Yes.
- Confirm by pressing the **ENTER** button.

C:Water Recycle
Inlets : No

Machines with Front Soap Hopper Only.

- By selecting "Water Recycle Inlets" **Yes** its possible to program 3 extra water inlet valves I4, I5, I6 in the wash

  sequences and 3 extra outlet valves for water recycling combined with pump in the drain-extraction sequences.
- No is the default value.
- Yes : Extra water recycle Inlets and Outlets can be selected in the Program menu's.

  No : Extra water recycle Inlets and Outlets are switched off in the Program menu's.
- Confirm by pressing the ENTER button.

<u>Attention</u> !
In some machines extra electrical components have to be added as an option to complete the electrical installation.

C:Supply Sign
A: Hopper

Only for washing machines with Front Soap Hopper.

- If the operator doesn't want to use the Soap Hoppers and has connected the electrical signal of the hopper to an external liquid soap supply pump, the signal must be set on **Liquid.**

- Liquid can be selected by pressing the **ARROW Right** button.
- Supply Sign A corresponds with the First soap hopper.
  Supply Sign B corresponds with the Second soap hopper.
  …
  Supply Sign E corresponds with the Fifth soap hopper.
- By selecting liquid, no pulse will interrupt the soap supply signal.
- Confirm by pressing the **ENTER** button.

C:Liquid Supply
Signals: No

- Some washing machines function with external Liquid soap supplies and others do not.
- If external liquid soap supplies are connected to the washing machine, the selection must be **Yes.**
- If No is selected, then No external liquid soap supplies can be programmed at the Program menu.
- Yes : Liquid Supply Signals enabled.
  No : Liquid Supply Signals disabled.
- Confirm by pressing the **ENTER** button.

C:Minimum Level
Start Supply : 0

- Soap Supply signals will only be started when the pre-set water level has been reached.
- Default value :
  - 0 units for top soap Dispensing machines.
  - 10 units for front soap Dispensing machines.
- The value can be programmed between 0 and the minimum programmable water level. See water consumption table.
- Confirm by pressing the **ENTER** button.

C:LS-Flush
Pre-time : 01 Sec

C:LS-Flush
After-time : 05 Sec

Front soap hopper machines Only.

- The liquid soaps supplying the manifold can be flushed by an extra water inlet that is mounted on the manifold of the soap dispensing system.
  This extra water supply is called : LS-Flush (Liquid Soap-Flush)
- Both menus are only visible when in the configuration menu “Liquid Supply Signals” is set Yes.
- The time to flush, before the liquid supplies are switched On, can be set to: 0-15 seconds.
- The time to flush, after the liquid supplies are switched Off, can be set to: 0-99 seconds.
- When both time settings are 0 seconds then the manifold will not flush water at all while liquid soap supply is pumped into the manifold.
- 1 second Pre-Time and 5 seconds After-Time are the default values. (FF120=10”).
- Confirm by pressing the **ENTER** button.

C:Temperature:
Celcius

- Press the **ARROW LEFT** or **RIGHT** button to select Celsius or Fahrenheit, depending if you prefer that the temperature is displayed in degrees Celsius or degrees Fahrenheit.

- Confirm by pressing the **ENTER** button.

C:Full
Heating : 67 %

- Full Heating 0-100 (%)
  This function allows to reduce the energy consumption at Long hot washes.
- When the heating has reached the programmed target temperature, heating will be restarted when the bath temperature goes below the temperature hysteresis.
  - Full Heating 100 %, the heating will be restarted until the end of the hot wash sequence.
  - Full Heating 0 %, the heating will not be restarted once the target temperature has been reached.
  - Full Heating 67%, the heating will be switched Off 1/3 before the end of the hot wash sequence.
- In case of a hygienic program, 100% must be selected.
- 67% is the default value except for MB machines 100%.
- Confirm by pressing the **ENTER** button.

C:Wet
Cleaning : No

- By selecting Wet Cleaning **Yes** its possible to program water levels below the standard minimum programmable levels. As a result (safety) the heating is software disabled when Wet Cleaning is selected **Yes**.
- No is the default value.
- Yes : Very low water levels are programmable.
  No : Water levels below minimum programmable are not programmable.
- Confirm by pressing the ENTER button.

C:Drum
Compartments : 2

- **Only for MB90, MB140, MB180 Washing machines.**
- Big MB machines can be execute with 2 or 3 drum compartments.
- 2 is the default value.
- By pressing the **ARROW LEFT** or **RIGHT** button, you can adjust the value. Press the **ENTER** button to confirm.

C:Wall
Model : No

- **Only for MB Washing machines.**
  (Medical Barrier Washers)
- If the MB machine is a Wall model then Yes must be selected.
- No is the default value.
- Confirm by pressing the **ENTER** button.

C:Auto Position
Drum : Yes

- **Only for MB90 – 140 – 180.**
- At the end of the wash cycle, the Inner Door of the Drum is positioned automatically at the hole Outer Door Tub.
- If the Auto Position system should get broken, you can switch off the Auto Position System.
  Then the operator has to position the drum manually as a standard MB-machine.
- Yes is the default value.
- Confirm by pressing the **ENTER** button.

Attention !
Look inside the tub through the door glass before unlocking the outer door, check that the inner door is positioned correctly

C:Erase All
Wash Prog?

- You can erase all the wash programs at once.
- This function should only be used at the installation of a new Full Control Wash Computer and if you want to ensure that no old programs stay in the memory of the computer.
- Select Yes or No and you have to confirm by pressing the **ENTER** button.
- By selecting YES, a new request for confirmation is displayed. **C: Delete all Programs ? No**
- Press the **YES** and **ENTER** button to confirm once more.

- All the memory Blocks will be cleared one by one.

C:Load Standard
Programs?

- If you want to make use of the 15 Standard wash programs, these standard programs must be loaded into the Wash Program Memory of the Full Control Computer.
- Press the **ENTER** button if you want to Load the Standard programs.
- Then you can Select the language of the Wash Program name.
- By the Wash Program Name the operator knows which kind of wash process the program corresponds with.

C:Language
English

- You can select the Language from a list by pressing the **ARROW LEFT** or **RIGHT** button and you have to confirm by the **ENTER** button.
- Then a Confirmation is asked before the First 15 wash program's will be loaded.
- By pressing the **Yes** and **ENTER** button, the 15 Standard program's will be loaded at the Program numbers 1 to 15.
- The Standard wash program's can be found in this manual at chapter 7.

C:Load Program
1 – 15 ? No

C:Load Program
16– 52 ? No

- After Loading the first 15 standard programs, it's also possible to load 37 dedicated programs.
- By pressing the **Yes** and **ENTER** button, the 37 dedicated program's will be loaded at the Program numbers 16 to 52.

C: Communication
Address : XXX

- Each washing machine in the RS485 washing machine network must have a unique Communication Address.
- 1 is the default value.
- Enter a unique number between 1 and 255.
- Confirm by pressing the **ENTER** button.

Remark

- If 2 or more machines have the same Communication Address then the network will not function properly.

C: Configuration
Menu Exit

- You can leave the Configuration Menu by pressing the **ENTER** button.

⚠ **Attention !**
With the ARROW UP button you can go back to a previous menu item.

How to Create and Adjust a Wash Program

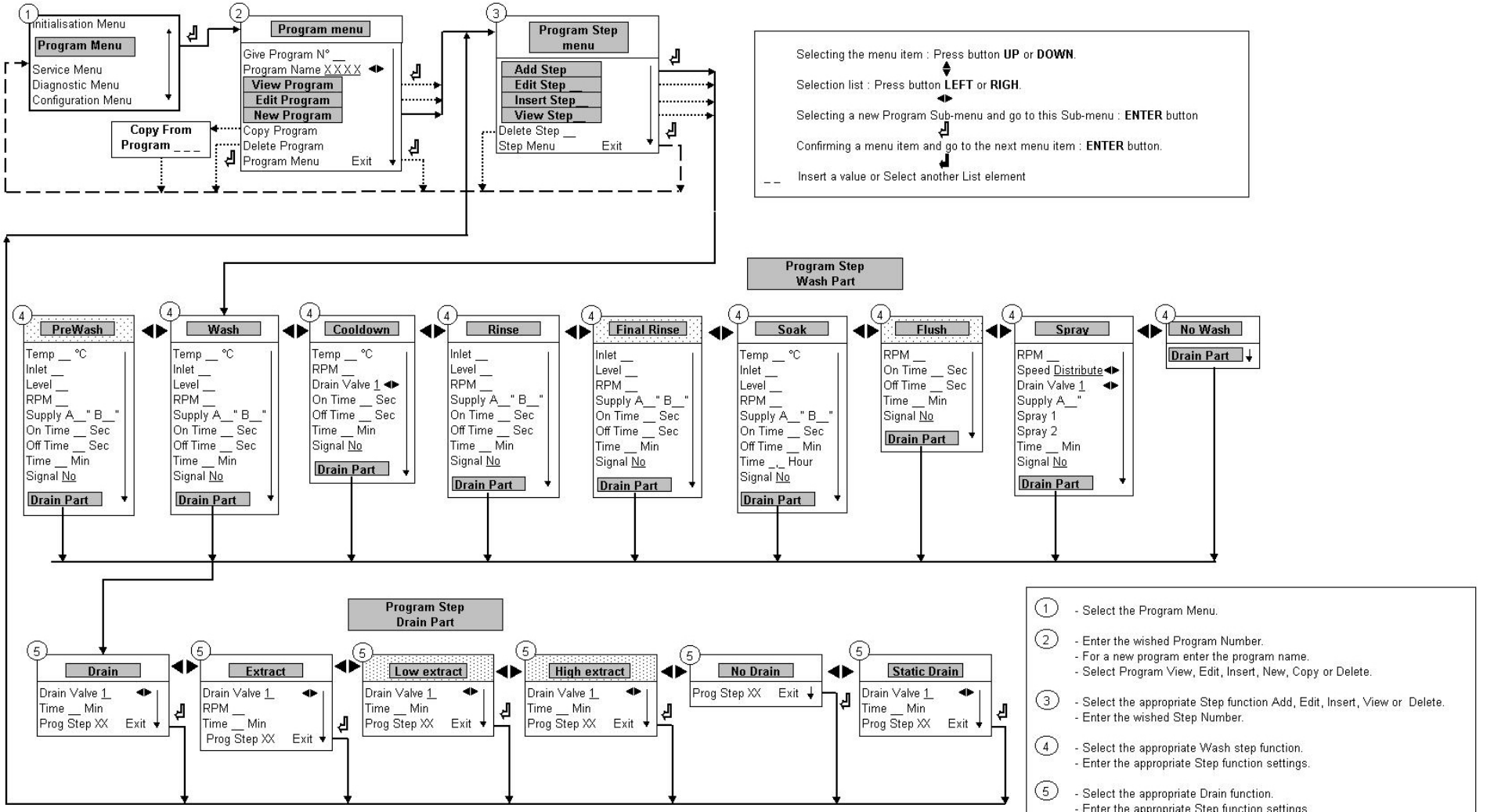

5. PROGRAMMING

5.1 GENERAL

Specific functions have been implemented in the Full Control wash computer to allow a detailed programming.

❑ **Functions for the complete program.**

- Program Number : Selecting the wash Program
- Name : Insert or Modify the Name for the Program
- View : Inspecting the Program settings without making changes
- Edit : Adjusting a Program
- New : Creating a New Program
- Copy : Making a Copy of an existing Program
- Delete : Erase the Program
- Exit : Leave the Program Menu

❑ **Functions for the program steps.**

- Step Number : Selecting the Program Step
- Add : Adding a Program Step at the end of the program
- Edit : Adjusting the Program Step
- Insert : Adding a Program Step between two other steps
- View : Inspecting the Step settings without making changes
- Delete : Deleting a Step
- Exit : Leave the Program Step Menu

Follow the flowchart step by step.

5.2. STEP ① : PROGRAM MENU

❑ HOW TO GET INTO THE PROGRAM MENU

The initialisation menu can only be accessed when the machine is in standby (the machine is powered up but no program is started).

SELECT Process_ _ is displayed.
Turn the key switch to the program mode.
The Main menu is now available.
Press the **ARROW DOWN** button to select the Program Menu.

Main Menu **PROGRAM**

Press the **ENTER** button to confirm your selection.
Goto ② ➪

5.3. STEP ② : PROGRAM FUNCTIONS

❑ SELECT THE PROGRAM NUMBER

P:Give Program
Number : _ _

▼

- Insert the desired program number.
- Program 1 to 99 can be selected.
- Press the **ENTER** button as a confirmation.

❑ ENTER THE PROGRAM NAME

P:Name Prog XX:
_ _ _ _ _ _ _ _ _ _

▼

- The Program Name is displayed at the start of a new cycle. By the program name, the operator can see which kind of wash program has been selected.
- If you DO NOT want to change the name of the wash program, press the **ARROW DOWN** button.
- If you want to change or create a new name for a wash program, press the **ENTER** button.
- With the **ARROW LEFT** or **RIGHT** button you can select the character position.
- With the **ARROW UP** or **DOWN** button you can select the desired character.
- By pressing the **ENTER** button, the dashes will disappear.
- Press the **ARROW DOWN** button to go to the next menu item

⚠ **Attention !**
The Name of the program is written into the EEPROM memory at the moment that you leave the Program Menu.

❑ VIEW A PROGRAM

P: Program N°XX
View

▼

- In Program View you can look to the Program Settings, without making changes.
- Press the **ARROW DOWN** button if you don't want to see the program Over-View.
- Press the **ENTER** button if you want to see the program Over-View.

⚠ **Attention !**
In the program Over-View Menu, at the end of a Wash Program Step, Press the ENTER button to see the next step. See also ③ ➪

❑ EDIT A PROGRAM

P: Program N°XX
Edit

▼

- Editing a program is changing the program by selecting a new element from a list or by changing values in an existing program. You can also add, insert or delete steps in an existing program.
- Press the **ARROW DOWN** button if you don‘t want to Edit the program.
- Press the **ENTER** button if you want to Edit the program. Goto ③ ⇘

❑ IMPLEMENTING A NEW PROGRAM

P: Program N°XX
New

▼

- When you want to create a new program, you have to make use of the add step function. By adding steps the new program will grow step by step.
- Press the **ARROW DOWN** button if you don‘t want to program a new wash program.
- Press the **ENTER** button if you want to implement a new program.
- A confirmation is asked to delete the old program.
  P: Delete Old Program? No
- Press the **ENTER** button if you don‘t agree to delete the old program. Goto ① ⇗
- Press the **YES** and **ENTER** button to confirm if you want to implement a new program. Goto ③ ⇘

❑ COPYING A PROGRAM

P: Program N°XX
Copy

▼

- If you want to create a new program, sometimes it’s easier to make a copy of an existing program and to make some small changes to your new copy.
- Press the **ARROW DOWN** button if you don‘t want to Copy a program.
- Press the **ENTER** button if you want to make a copy from another program.
- A confirmation is asked to delete the old program.
  P: Delete Old Program? No
- Press the **ENTER** button if you don‘t agree to copy the old program. Goto ① ⇗
- Press the **YES** and **ENTER** button to confirm if you want to implement a new program.

P: Copy from
Program N° _ _ _

▼

- Insert the desired program number from which you want to copy the program.
- Press the **ENTER** button as a confirmation. Goto ① ✍

⚠ **Attention !**
The standard programs can be selected at the program numbers 101-115.
Program number 101 corresponds with Standard Program 1.
Program number 102 corresponds with Standard Program 2.
…
Program number 115 corresponds with standard Program 15.

❑ DELETE A PROGRAM

P: Program N°XX
Delete

▼

- If you want to get rid of an existing program, use the delete program function. The complete program will be erased at once.
- Press the **ARROW DOWN** button if you don't want to Delete the program.
- Press the **ENTER** button if you want to delete a program.
- A confirmation is asked to delete the old program.
  P: Delete Old Program? No
- Press the **ENTER** button if you don't agree to delete the old program. Goto ① ✍
- Press the **YES** and **ENTER** button to confirm if you want to delete the old Program.
  Goto ① ✍

❑ EXIT THE PROGRAM MENU

P: Program
Menu Exit

↵

- Press the **ENTER** button if you want to leave the PROGRAM Menu.

⚠ **Attention !**
With the ARROW UP button you can go back to a previous menu item.

5.4. STEP ③ : PROGRAM STEP FUNCTION

❑ ADDING A STEP AT THE END OF THE PROGRAM

P:Add
Step

▼

- If you create a new program, new steps will be added at the end of the program.
- Press the **ARROW DOWN** button if you don‘t want to Add a new step.
- Press the **ENTER** button if you want to add a new step.
  Goto ④ ➪

❑ EDIT A STEP

P:Edit
Step : _ _

▼

- If you edit a step, you will change values or list elements from an existing step.
- Press the **ARROW DOWN** button if you don‘t want to Edit a step.
- Insert the Step number.
  If the number is not accepted, this means that the step is not available.
- Press the **ENTER** button to confirm your selection.
  Goto ④ ➪

❑ INSERT A STEP

P:Insert
Step : _ _

▼

- If you insert a step, a new step will be inserted between two existing steps.
- Press the **ARROW DOWN** button if you don‘t want to INSERT a step.
- Insert the Step number.
  If the number is not accepted, this means that there is no step with a <u>step number = inserted number – 1</u> available. A new step can only be inserted between two available steps.
- Press the **ENTER** button to confirm your selection.
  Goto ④ ➪

❑ VIEW A STEP

P:View
Step : _ _

▼

- Before making changes in a wash program, it‘s recommended to have a look at the actual settings by the view function.
- Press the **ARROW DOWN** button if you don‘t want to View a step.

- Insert the Step number.
  If the number is not accepted, this means that the step is not available.
- Press the **ENTER** button to confirm your selection.
  Goto ④ ⇘

❑ DELETE A STEP

```
P:Delete
  Step : _ _
```

▼

- If you delete a step, an existing step in the program will disappear.
- Press the **ARROW DOWN** button if you don‘t want to DELETE a step.
- Insert the Step number.
- Press the **ENTER** button to confirm your selection.
  If the number is not accepted, this means that the step is not available.
- A confirmation is asked to delete the old step.
  P: Delete Old Step? No
- Press the **ENTER** button if you do NOT want to delete the old step.
- Press the **YES** and **ENTER** button to confirm if you want to delete a step.
  Goto ③ ⇘

❑ EXIT STEP MENU

```
P:Step
  Menu      Exit
```

↵

- Press the **ENTER** button if you want to leave the PROGRAM STEP Menu.

⚠ **<u>Attention</u> !**
With the ARROW UP button you can go back to a previous menu item.

5.5. STEP ④ : PROGRAMMING THE WASH PART

This paragraph gives a detailed explanation about programming the Wash Sequences.

- Each program step contains a wash part and a drain part.
- First the wash part must be selected, item by item can be programmed.
- Next the drain part must be selected, item by item can be programmed. See step ⑤ ☞.
- Without making changes you can watch item by item, by pressing the **ARROW DOWN** or **UP** button.
- If you want to make changes :
  - Insert a new value.
  - Enable or disable a Setting by pressing the **YES** or **NO** button.
  - Select a list element by pressing the **ARROW LEFT** or **RIGHT** button.
  ➔ You have always to confirm by pressing the **ENTER** button.
- Each time you add or insert a new step, default values have been pre-programmed.
  So with less effort, complete programs can be programmed.
  See also chapter 3 for a general explanation concerning the creation of wash programs.
- You can recognize a list element by the LEFT and RIGHT ARROW symbol at the right side on the display.
- The arrow down symbol on the display points to the last Menu Item : EXIT.

❑ SELECTING THE WASH PART

P:Pr XX Step XX
Wash

▼

- If you have selected **Add Step**, **Edit Step** or **Insert Step**, you have to select the wished wash sequence now.
- Depending the machine type with top or front soap hopper, you have more or less sequences available.

For Washing Machines with a Soap Box at the Top :

Prewash | **Wash** | Cooldown | Rinse | Final Rinse | Soak | Flush | Spray | No wash

For Washing Machines with a Soap Hopper at the Front :

Wash | Cooldown | Rinse | Soak | Spray | No wash

- For a new step, as a default, the first displayed function is the **Wash** sequence.
- Now by pressing the **ARROW LEFT** or **RIGHT** button, you can select the wished sequence.
- Press the **ENTER** button to confirm.
- You can also use the **ARROW DOWN** button if you accept the pre-programmed default value.

❑ THE PREWASH SEQUENCE

Prewash | Wash | Cooldown | Rinse | Final Rinse | Soak | Flush | Spray | No wash

Only for washing machines with a Top Soap Hopper.

P:Pr XX Step XX
Temp : 40 °C

▼

°C : degrees Celsius
°F : degrees Fahrenheit

- The temperature can be programmed between 1°C and 45°C.
- 40°C is the suggested default value.
- Insert the desired temperature. Press the **ENTER** button for confirmation.

P:Pr XX Step XX
Inlet : 2 3

▼

- 4 Inlets can be programmed. I1, I2, I3, I4, I5 and I6 are available.
- For a default of 40°C, the suggested inlet valves are I2 and I3.
- The suggested inlet valves are related to the temperature and the soap box to be used.
- Insert the desired inlet valves. Press the **ENTER** button for confirmation.

⚠ **Attention !**
If you insert other inlet valves than the suggested ones, problems can occur at the water fill process.

P:Pr XX Step XX
Level : _ _

▼

- The suggested water Level corresponds with the Normal Low water level.
- The suggested water level depends of the machine type.
- Check the corresponding table paragraph 3.4.
- The water level can only be programmed within certain limits.
- Insert the wished water level. Press the **ENTER** button for confirmation.

P:Pr XX Step XX
RPM : _ _

▼

- *The suggested drum speed value depends of the machine type.*
- *Check the corresponding table paragraph 3.4*
- *The drum speed value can only be programmed within certain limits.*
- *Insert the wished speed value. Press the **ENTER** button for confirmation.*

```
P:Pr XX Step XX
  Supply ?
```

▼

```
P:Pr XX Step XX
  Supply A:   0 Sec
```

▼

```
P:Soap Supply
  Menu      Exit
```

↵

- If you don‘t want to get in the supply sub-menu, press the **ARROW DOWN** button.
- Press the **ENTER** button to get into the supply sub-menu.
- Default: all the supplies are switched off. (time = 0)
- Liquid soap supplies can only be programmed if the liquid selection in the configuration menu is enabled.
- The supplies can be programmed for an interval time between 0 and 99 seconds.
- The supply will not be activated if 0 Seconds is programmed.
- You can program up to 4 supplies at the same time. If you have programmed more then 4 supplies an error message will be generated. Put the time of the supplies back to zero until not more than 4 non-zero time values are remaining.
- The overview display shows the Supply Name and the corresponding programmed time.
- Insert the desired supply time. Press the **ENTER** button for confirmation.
- At the end of the Menu, when EXIT is displayed, press the **ENTER** button to leave the supply Menu.

⚠ **Attention !**

For Top Soap Hopper washing machines, the External liquid soap pumps correspond with the supplies D to N.

The number of external supplies that is available depends on the machine type.

```
P:Pr XX Step XX
  On Time : _ _ Sec
```

▼

```
P:Pr XX Step XX
  Off Time: _ _ Sec
```

▼

- The wash motor ON time can be programmed between 0 and 99 seconds.
- The wash motor OFF time can be programmed between 3 and 99 seconds.
- The suggested default values can be adapted in the Initialisation menu.
- Standard wash motor ON time of 12 seconds and a wash motor OFF time of 3 seconds is recommended for normal wash. A wash motor ON time of 3 seconds and a wash motor OFF time of 12 seconds is recommended for a gentle wash (woolens).
- Insert the desired ON – OFF times. Press the **ENTER** button for confirmation.

```
P:Pr XX Step XX
  Time : 4.0 Min
```

▼

- A PreWash sequence can be programmed between 0 and 99.5 minutes in steps of 0.5 minutes.
- The default time is 4.0 Minutes.
- Programming a time of 0 minutes : the Prewash Sequence will not be functional (cfr No Wash)

- Insert the desired Prewash time. Press the **ENTER** button for confirmation.

P:Pr XX Step XX
Signal : No

- When a signal is programmed, a pause will be introduced at the end of the Wash Step. This allows the operator to add soap for the next step. To alert the operator that the program has been interrupted, a buzzer signal will be activated.
  By pressing the **START** button, the program will continue.
- Yes : Signal enabled.
  No : Signal disabled.
- Press the **ENTER** button for confirmation.
  Goto ⑤

❑ THE WASH SEQUENCE

Prewash | **Wash** | Cooldown | Rinse | Last Rinse | Soak | Flush | Spray | No wash

P:Pr XX Step XX
Temp : 60 °C

▼

°C : degrees Celsius
°F : degrees Fahrenheit

- The temperature can be programmed between 1°C and 92°C.
- 60°C is the suggested default value.
- Insert the desired temperature. Press the **ENTER** button for confirmation.

P:Pr XX Step XX
Inlet : _ _ _ _

▼

Top Soap-Hopper washing machines

- 4 Inlets can be programmed. I1, I2, I3, I4, I5 and I6 are available.
- For a default value of 60°C, the suggested inlet valves are I3, I4 and I5.
- The suggested inlet valves are related to the temperature and the soap box.
- Insert the desired inlet valves. Press the **ENTER** button for confirmation.

Front Soap-Hopper washing machines

- 3 Inlets can be programmed. I1, I2, and I3 are available.
- For a default value of 60°C, the suggested inlet valves are I2 and I3.
- Insert the desired inlet valves. Press the **ENTER** button for confirmation.

⚠ **Attention !**
If you insert other inlet valves than the suggested ones, problems can occur at the water fill process.

P:Pr XX Step XX
Level : _ _

▼

- The suggested Water Level corresponds with the Normal Low water level.
- The suggested water level depends on the machine type.
- Check the corresponding table paragraph 3.4.
- The water level can only be programmed within certain limits.
- Insert the wished water level. Press the **ENTER** button for confirmation.

P:Pr XX Step XX
RPM : _ _

▼

- *The suggested drum speed value depends on the machine type.*
- *Check the corresponding table* paragraph 3.4.
- *The drum speed value can only be programmed within certain limits.*

- *Insert the desired speed value. Press the **ENTER** button for confirmation.*

```
P:Pr XX Step XX
  Supply ?
```

▼

```
P:Pr XX Step XX
  Supply A:   0 Sec
```

▼

```
P:Soap Supply
  Menu     Exit
```

↵

- If you don‘t want to get into the supply sub-menu, press the **ARROW DOWN** button.
- Press the **ENTER** button to get into the supply sub-menu.
- Default: all the supplies are switched off. (time = 0)
- Liquid soap supplies can only be programmed if the selection in the configuration menu is enabled.
- The supplies can be programmed for an interval time between 0 and 99 seconds.
- The supply will not be activated if 0 Seconds is programmed.
- You can program up to 4 supplies at the same time.
  If you have programmed more then 4 supplies an error message will be generated. Put the time of the supplies back to zero until not more than 4 non-zero time values are remaining.
- The overview display shows the Supply Name and the corresponding programmed time.
- Insert the supply time. Press the **ENTER** button for confirmation.
- At the end of the Menu, when EXIT is displayed, Press the **ENTER** button to leave the supply Menu.

⚠ **Attention !**

For Front Soap Hopper washing machines, the soap is added by programming the supplies A to E. (X22/5 A to D)

External liquid soap pumps correspond with the supplies F to K.

For Top Soap Hopper washing machines, the External liquid Soap pumps correspond with the supplies D to J.

The number of external supplies that is available depends on the machine type.

```
P:Pr XX Step XX
  On Time : _ _ Sec
```

▼

```
P:Pr XX Step XX
  Off Time : _ _ Sec
```

▼

- The wash motor ON time can be programmed between 0 and 99 seconds.
- The wash motor OFF time can be programmed between 3 and 99 seconds.
- The suggested default values can be adapted in the Initialisation menu.
- Standard wash motor ON time of 12 seconds and a wash motor OFF time of 3 seconds is recommended for normal wash. A wash motor ON time of 3 seconds and a wash motor OFF time of 12 seconds is recommended for a gentle wash (woolens).
- Insert the wished ON – OFF times. Press the **ENTER** button FOR CONFIRMATION.
- **FS120, MB90, MB140, MB180 : 12Sec ON and 5Sec OFF**

P:Pr XX Step XX
Time : 7.0 Min

- A Wash Sequence can be programmed between 0 and 99.5 minutes in steps of 0.5 minutes.
- The default time is 7.0 Minutes.
- Programming a time of 0 minutes : the Wash Sequence will not be functional (cfr No Wash)
- Insert the desired Wash Sequence time. Press the **ENTER** button for confirmation.

P:Pr XX Step XX
Signal : No

- When a signal is programmed, a pause will be introduced at the end of the Wash Step. This allows the operator to add soap for the next step. To alert the operator that the program has been interrupted, a buzzer signal will be activated.
  By pressing the **START** button, the program will continue.
- Yes : Signal enabled.
  No : Signal disabled.
- Press the **ENTER** button for confirmation.
  Goto ⑤ ☞

❑ THE COOLDOWN SEQUENCE

Prewash | Wash | **Cooldown** | Rinse | Final Rinse | Soak | Flush | Spray | No wash

- After a Hot wash you can program a Cool-down Sequence to avoid the temperature shock and shrinking of the garments.
- The drain step after the Hot wash must be put on NO DRAIN.
- No inlets are programmable for :
  - the Top Soap hopper machines : inlet 6 is the standard inlet.
  - the Front Soap hopper machines : inlet 2 is the standard inlet.
- The water level can't be programmed as the process of adding and draining water doesn't allow this.

⚠ **ATTENTION !**
DO NOT PROGRAM A DRAIN SEQUENCE BEFORE A COOLDOWN SEQUENCE

P:Pr XX Step XX
Temp : 60 °C

▼

°C : degrees Celsius
°F : degrees Fahrenheit

- The temperature can be programmed between 1°C and 60°C.
- 60°C is the suggested default value.
- Insert the desired temperature. Press the **ENTER** button for confirmation.

P:Pr XX Step XX
RPM : _ _

▼

- *The suggested drum speed value depends of the machine type.*
- *Check the corresponding table* paragraph 3.4.
- *The drum speed value can only be programmed within certain limits.*
- *Insert the desired speed value. Press the **ENTER** button for confirmation.*

P:Pr XX Step XX
Drain valve : 1

▼

1 | 2 | 1+2

- **Only available on washing machines with both : a normal Open and a normal Closed Drain valve.**
- As water will be drained at the Cool-down Sequence, it must be possible to select the drain valve 1 or 2.
- The default Drain valve is Drain valve 1.
- Select the desired Drain Valve by pressing the **ARROW LEFT** or **RIGHT** button.
- Press the **ENTER** button for confirmation.

P:Pr XX Step XX
On Time : _ _ Sec

▼

P:Pr XX Step XX
Off Time: _ _ Sec

▼

- The wash motor ON time can be programmed between 0 and 99 seconds.
- The wash motor OFF time can be programmed between 3 and 99 seconds.
- The suggested default values can be adapted in the Initialisation menu.
- Standard wash motor ON time of 12 seconds and a wash motor OFF time of 3 seconds is recommended for normal wash. A wash motor ON time of 3 seconds and a wash motor OFF time of 12 seconds is recommended for a gentle wash (woollens).
- Insert the wished ON – OFF times. Press the **ENTER** button for confirmation.
- **FS120, MB90, MB140, MB180 : 12Sec ON and 5Sec OFF**

P:Pr XX Step XX
Time : 7 Min

▼

- The Cool-down Sequence can be programmed between 0 and 99.5 minutes in steps of 0.5 minutes.
- The default time is 7 Minutes.
- The programmed time = the time needed to decrease the water temperature.
- Once the programmed temperature has been reached, the next Sequence will be started.
- Programming a time of 0 minutes : the Cool-down will not be functional (cfr No Wash)
- Insert the desired Cool-down time. Press the **ENTER** button for confirmation.

⚠ **Attention !**
If a short time is programmed, the water temperature will decrease fast.
Recommendation !
Programming 1 minute for each 3°C temperature drop
For a hot wash of 90°C and a Cool-down Sequence of 60°C, a time of about 30°C/3°C = 10 Minutes should be programmed for the Cool-down Sequence.

P:Pr XX Step XX
Signal : No

▼

- When a signal is programmed, a pause will be introduced at the end of the Wash Step. This allows the operator to add soap for the next step. To alert the operator that the program has been interrupted, a buzzer signal will be activated. By pressing the **START** button, the program will continue.
- Yes : Signal enabled.
  No : Signal disabled.
- Press the **ENTER** button for confirmation.
  GOTO ⑤ ⇨

❑ THE RINSE SEQUENCE

Prewash | Wash | Cooldown | **Rinse** | Final Rinse | Soak | Flush | Spray | No wash

- No temperature can be programmed as a Rinse is only dedicated for cold water.

P:Pr XX Step XX
Inlet : _ _ _

▼

Top Soap-Hopper washing machines
- 3 Inlets can be programmed. I1, I2, I5 and I6 are available.
- The suggested inlet valves are I2, I5 and I6.
- Insert the desired inlet valves. Press the **ENTER** button for confirmation.

Front Soap-Hopper washing machines
- 2 Inlets can be programmed. I1 and I2 are available.
- The suggested inlet valve is I2.
- Insert the desired inlet valves. Press the **ENTER** button for confirmation.

⚠ **Attention !**
If you insert other inlet valves than the suggested ones, Problems can occur at the water fill process.

P:Pr XX Step XX
Level : _ _

▼

- The suggested Water Level corresponds with the Normal High water level.
- The suggested water level depends on the machine type.
- Check the corresponding table paragraph 3.4.
- The water level can only be programmed within certain limits.
- Insert the desired water level. Press the **ENTER** button for confirmation.

P:Pr XX Step XX
RPM : _ _

▼

- *The suggested drum speed value depends on the machine type.*
- *Check the corresponding table* paragraph 3.4.
- *The drum speed value can only be programmed within certain limits.*
- *Insert the desired speed value. Press the **ENTER** button for confirmation.*

P:Pr XX Step XX
Supply ?

▼

- If you don‘t want to get into the supply sub-menu, press the **ARROW DOWN** button.
- Press the **ENTER** button to get into the supply sub-menu.
- Default: all the supplies are switched off. (time = 0)

```
P:Pr XX Step XX
  Supply A:   0 Sec
```

▼

```
P:Soap Supply
Menu       Exit
```

↵

- Liquid soap supplies can only be programmed if the selection in the configuration menu is enabled.
- The supplies can be programmed for an interval time between 0 and 99 seconds.
- The supply will not be activated if 0 Seconds is programmed.
- Up to 4 supplies can function at the same time at the same Sequence.
  If you have programmed more then 4 supplies an error message will be generated. Put the time of the supplies back to zero until not more than 4 non-zero time values are remaining.
- The overview display shows the Supply Name and the corresponding programmed time.
- Insert the desired supply time. Press the **ENTER** button for confirmation.
- At the end of the Menu, when EXIT is displayed, press the **ENTER** button to leave the supply Menu.

⚠ **Attention !**

For Front Soap Hopper washing machines, the soap is added by programming the supplies A to E. (X22/5 A to D) External liquid soap pumps correspond with the supplies F to K.

For Top Soap Hopper washing machines, the External liquid Soap pumps correspond with the supplies D to N.

The number of external supplies that is available depends on the machine type.

```
P:Pr XX Step XX
 On Time : _ _ Sec
```

▼

```
P:Pr XX Step XX
 Off Time : _ _ Sec
```

▼

- The wash motor ON time can be programmed between 0 and 99 seconds.
- The wash motor OFF time can be programmed between 3 and 99 seconds.
- The suggested default values can be adapted in the Initialisation menu.
- Standard wash motor ON time of 12 seconds and a wash motor OFF time of 3 seconds is recommended for normal wash. A wash motor ON time of 3 seconds and a wash motor OFF time of 12 seconds is recommended for a gentle wash (woolens).
- Insert the desired ON – OFF times. Press the **ENTER** button for confirmation.
- **FS120, MB90, MB140, MB180 : 12Sec ON and 5Sec OFF**

```
P:Pr XX Step XX
  Time : 2.0 Min
```

▼

- The Rinse Sequence can be programmed between 0 and 99 minutes in steps of 0.5 minutes.
- The default time is 2.0 Minutes.

- Programming a time of 0 minutes : the Rinse will not be functional (cfr No Wash)
- Insert the desired Rinse time. Press the **ENTER** button for confirmation.

P:Pr XX Step XX
Signal : No

- When a signal is programmed, a pause will be introduced at the end of the Wash Step. This allows the operator to add soap for the next step. To alert the operator that the program has been interrupted, a buzzer signal will be activated.
  By pressing the **START** button, the program will continue.
- Yes : Signal enabled.
  No : Signal disabled.
- Press the **ENTER** button for confirmation.
  Goto ⑤ ☞

❑ THE FINAL RINSE SEQUENCE

Prewash | Wash | Cooldown | Rinse | **Final Rinse** | Soak | Flush | Spray | No wash

Only for Top Soap Hopper washing machines.

- No temperature can be programmed as a Last Rinse is only dedicated for cold (hard) water.

P:Pr XX Step XX
Inlet : _ _ _ _

▼

Top Soap Hopper washing machines

- 3 Inlets can be programmed. I1, I2, I5 and I6 are available.
- A machine with **3** water supply inlets functions with Cold Hard water, Cold Soft water and Warm Soft water .
  ➔ The suggested inlet valve is I1 Cold Hard water.
- A machine with **2** water supply inlets functions with Cold Soft water and Warm Soft water.
  ➔ The suggested inlet valves are I1 + I6 Cold Soft water.
- The suggested inlet valves are related to the temperature and the soap box.
- Insert the desired inlet valves. Press the **ENTER** button for confirmation.

⚠ **Attention !**
If you insert other inlet valves than the suggested ones, problems can occur at the water fill process.

P:Pr XX Step XX
Level : _ _

▼

- The suggested Water Level corresponds with the Normal High water level.
- The suggested water level depends on the machine type.
- Check the corresponding table paragraph 3.4.
- The water level can only be programmed within certain limits.
- Insert the desired water level. Press the **ENTER** button for confirmation.

P:Pr XX Step XX
RPM : _ _

▼

- *The suggested drum speed value depends on the machine type.*
- *Check the corresponding table* paragraph 3.4.
- *The drum speed value can only be programmed within certain limits.*
- *Insert the desired speed value. Press the **ENTER** button for confirmation.*

P:Pr XX Step XX
Supply ?

▼

P:Pr XX Step XX
Supply A : 0 Sec

▼

P:Soap Supply
Menu Exit

↵

- If you don't want to get into the supply sub-menu, press the **ARROW DOWN** button.
- Press the **ENTER** button to get into the supply sub-menu.
- Default: all the supplies are switched off. (time = 0)
- Liquid soap supplies can only be programmed if the selection in the configuration menu is enabled.
- The supplies can be programmed for an interval time between 0 and 99 seconds.
- The supply will not be activated if 0 Seconds is programmed.
- Up to 4 supplies can function at the same time at the same Sequence.
  If you have programmed more then 4 supplies an error Message will be generated. Put the time of the supplies back to zero until not more than 4 non-zero time values are remaining.
- The overview display shows the Supply Name and the corresponding programmed time.
- Insert the desired supply time. Press the **ENTER** button for confirmation.
- At the end of the Menu, when EXIT is displayed, press the **ENTER** button to leave the supply Menu.

⚠ **Attention !**

For Top Soap Hopper washing machines, the External liquid soap pumps correspond with the supplies D to N.

The number of external supplies that is available depends on the machine type.

P:Pr XX Step XX
On Time : _ _ Sec

▼

P:Pr XX Step XX
Off Time : _ _ Sec

▼

- The wash motor ON time can be programmed between 0 and 99 seconds.
- The wash motor OFF time can be programmed between 3 and 99 seconds.
- The suggested default values can be adapted in the Initialisation menu.
- Standard wash motor ON time of 12 seconds and a wash motor OFF time of 3 seconds is recommended for normal wash. A wash motor ON time of 3 seconds and a wash motor OFF time of 12 seconds is recommended for a gentle wash (woolens).
- Insert the desired ON – OFF times. Press the **ENTER** button for confirmation.

P:Pr XX Step XX
Time : 2.0 Min

- The Final Rinse Sequence can be programmed between 0 and 99 minutes in steps of 0.5 minutes.
- The default time is 2.0 Minutes.
- Programming a time of 0 minutes : the Final Rinse will not be functional (cfr No Wash)
- Insert the desired Final Rinse time. Press the **ENTER** button for confirmation.

P:Pr XX Step XX
Signal : No

- When a signal is programmed, a pause will be introduced at the end of the Wash Step. This allows the operator to add soap for the next step. To alert the operator that the program has been interrupted, a buzzer signal will be activated.
  By pressing the **START** button, the program will continue.
- Yes : Signal enabled.
  No : Signal disabled.
- Press the **ENTER** button for confirmation.
  Goto ⑤ ☞

❑ THE SOAK SEQUENCE

Prewash | Wash | Cooldown | Rinse | Final Rinse | **Soak** | Flush | Spray | No wash

P:Pr XX Step XX
Temp : 40 °C

▼

°C : degrees Celsius
°F : degrees Fahrenheit

- The temperature can be programmed between 1°C and 45°C.
- 40°C is the suggested default value.
- Insert the desired temperature. Press the **ENTER** button for confirmation.

P:Pr XX Step XX
Inlet : _ _ _ _

▼

Top Soap Hopper washing machines

- 4 Inlets can be programmed. I1, I2, I3, I4, I5 and I6 are available.
- As for a default of 40°C, the suggested inlet valves are I2 and I3.
- The suggested inlet valves are related to the temperature and the soap box.
- Insert the desired inlet valves. Press the **ENTER** button for confirmation.

Front Soap Hopper washing machines

- 3 Inlets can be programmed. I1, I2, and I3 are available.
- For 40°C, the suggested inlet valves are I2 and I3.
- Insert the desired inlet valves. Press the **ENTER** button for confirmation.

⚠ **Attention !**
If you insert other inlet valves than the suggested ones, Problems can occur at the water fill process.

P:Pr XX Step XX
Level : _ _

▼

- The suggested Water Level corresponds with the Normal Low water level.
- The suggested water level depends of the machine type.
- Check the corresponding table paragraph 3.4.
- The water level can only be programmed within certain limits.
- Insert the desired water level. Press the **ENTER** button for confirmation.

```
P:Pr XX Step XX
  RPM : _ _
```

- *The suggested drum speed value depends on the machine type.*
- *Check the corresponding table* paragraph 3.4.
- *The drum speed value can only be programmed within certain limits.*
- *Insert the desired speed value. Press the **ENTER** button for confirmation.*

```
P:Pr XX Step XX
  Supply ?
```

```
P:Pr XX Step XX
  Supply A :  0 Sec
```

```
P:Soap Supply
  Menu    Exit
```

- If you don‘t want to get into the supply sub-menu, press the **ARROW DOWN** button.
- Press the **ENTER** button to get into the supply sub-menu.
- Default: all the supplies are switched off. (time = 0)
- Liquid soap supplies can only be programmed if the selection in the configuration menu is enabled.
- The supplies can be programmed for an interval time between 0 and 99 seconds.
- The supply will not be activated if 0 Seconds is programmed.
- Up to 4 supplies can function at the same time at the same Sequence.
  If you have programmed more then 4 supplies an error message will be generated. Put the time of the supplies back to zero until not more than 4 non-zero time values are remaining.
- The overview display shows the Supply Name and the corresponding programmed time.
- Insert the desired supply time. Press the **ENTER** button for confirmation.
- At the end of the Menu, when EXIT is displayed, you have to press the **ENTER** button to leave the supply Menu.

⚠ **Attention !**

For Front Soap Hopper washing machines, the soap is added by programming the supplies A to E. (X22/5 A to D)

External liquid soap pumps correspond with the supplies F to K.

For Top Soap Hopper washing machines, the External liquid Soap pumps correspond with the supplies D to N.

The number of external supplies that is available depends on the machine type.

```
P:Pr XX Step XX
  On Time: _ _ Sec
```

- The wash motor ON time can be programmed between 0 and 99 seconds.
- The wash motor OFF time can be programmed between 1 and 99 minutes.
- The suggested default values can be adapted in the Initialisation menu.

P:Pr XX Step XX
Off Time: _ _ Min

- Standard wash motor ON time of 12 seconds and a wash motor OFF time of 10 minutes is recommended.
- Insert the desired ON – OFF times. Press the **ENTER** button for confirmation.

P:Pr XX Step XX
Time : 1.0 H

- The Soak Sequence can be programmed between 0 and 25,5 Hours in steps of 0,1 Hour.
- The default time is 1.0 Hour.
- Programming a time of 0 hour : the Soak will not be functional (cfr No Wash)
- Insert the desired Soak time. Press the **ENTER** button for confirmation.

P:Pr XX Step XX
Signal : No

- When a signal is programmed, a pause will be introduced at the end of the Wash Step. This allows the operator to add soap for the next step. To alert the operator that the program has been interrupted, a buzzer signal will be activated.
  By pressing the **START** button, the program will continue.
- Yes : Signal enabled.
  No : Signal disabled.
- Press the **ENTER** button for confirmation.

Goto ⑤ ⇘

❑ THE FLUSH SEQUENCE

Prewash | Wash | Cooldown | Rinse | Final Rinse | Soak | **Flush** | Spray | No wash

Only for Top Soap Hopper washing machines.

- No water level can be programmed as the water will raise and escape by the overflow hole.
- No inlets can be programmed as only cold water from inlet 6 is used.
- No supplies can be programmed.

P:Pr XX Step XX
RPM : _ _

- *The suggested drum speed value depends on the machine type.*
- *Check the corresponding table* paragraph 3.4.
- *The drum speed value can only be programmed within certain limits.*
- *Insert the desired speed value. Press the **ENTER** button for confirmation.*

P:Pr XX Step XX
On Time : _ _ Sec

P:Pr XX Step XX
Off Time : _ _ Sec

- The wash motor ON time can be programmed between 0 and 99 seconds.
- The wash motor OFF time can be programmed between 3 and 99 seconds.
- The suggested default values can be changed in the Initialisation menu.
- Standard wash motor ON time of 12 seconds and a wash motor OFF time of 3 seconds is recommended for normal wash. A wash motor ON time of 3 seconds and a wash motor OFF time of 12 seconds is recommended for a gentle wash (woolens).
- Insert the desired ON – OFF times. Press the **ENTER** button for confirmation.

P:Pr XX Step XX
Time : 10.0 Min

- The Flush Sequence can be programmed between 0 and 99 minutes in steps of 0.5 minutes.
- The Default time is 10.0 Minutes.
- Programming a time of 0 minutes : the Flush will not be functional (cfr No Wash)
- Insert the desired Flush Sequence time. Press the **ENTER** button for confirmation.

P:Pr XX Step XX
Signal : No

- When a signal is programmed, a pause will be introduced at the end of the Wash Step. This allows the operator to add soap for the next step. To alert the operator that the program has been interrupted, a buzzer signal will be activated.
  By pressing the **START** button, the program will continue.
- Yes : Signal enabled.
  No : Signal disabled.
- Press the **ENTER** button for confirmation.
  Goto ⑤ ⇘

❑ THE SPRAY SEQUENCE

Prewash | Wash | Cooldown | Rinse | Final Rinse | Soak | Flush | **Spray** | No wash

- Water or Liquid is injected at Distribution or Low Spin Speed
- No standard water inlets can be programmed in this function.
- The spray inlets can only be programmed at the X & XF - type machines.
- On the other machines the liquid will be injected based on soap supply programming.

P:Pr XX Step XX
RPM : _ _ _

▼

- *The suggested drum speed value depends on the machine type.*
- *The drum speed value can only be programmed within certain limits.*
  [50 – 150] RPM and [400 – 600] RPM
- *The default Spray speed value is 120 RPM.*
- *Insert the desired speed value. Press the **ENTER** button for confirmation.*

P:Pr XX Step XX
Spd : Distribute

▼

- Speed selection at the Spray Sequence :
  - 1-motor type washing machine : Low spin speed
    ➔ Low spin speed is the default setting
    ➔ No selection is needed
  - 2-motor type washing machine : Distribute or Low Spin Speed
    ➔ Distribute is the default setting.
    ➔ Select the Speed Selection from the list and press the **ENTER** button for confirmation.

P:Pr XX Step XX
Drain valve : 1

▼

1 | 2 | 1+2

- **Only available on washing machines with both : a normal Open and a normal Closed Drain valve.**
- As water will be drained at the Spray sequence, it must be possible to select the wished drain valve 1 or 2.
- The default Drain valve is Drain valve 1.
- Select the desired Drain Valve by pressing the **ARROW LEFT** or **RIGHT** button.
- Press the **ENTER** button for confirmation.

P:Pr XX Step XX
Supply ?

▼

- If you don‘t want to get into the supply sub-menu, press the **ARROW DOWN** button.
- Press the **ENTER** button to get into the supply sub-menu.
- Default: all the supplies are switched off.
- Extra supplies can only be programmed if the selection in the

P:Pr XX Step XX
Supply A : 0 Sec

configuration menu is enabled. Extra supplies, correspond with soap pump signals.

- The Spray Sequence will only function with 1 Supply. If you have programmed more then 1 supply an error message will be generated. Put the time of the supplies back to zero until not more then 1 non-zero time value is remaining.
- If a supply has been programmed, no spray inlets can be programmed.
- The supplies can be programmed for an interval time between 0 and 99 seconds.
- The supply will not be activated if 0 Seconds is programmed.
- The overview display shows the Supply Name and the corresponding programmed time.
- If No supply has been programmed : the Spray sequence will not be functional (the sequence time must also be 0) (cfr No Wash).
- Insert the desired supply time. Press the **ENTER** button for confirmation.
- At the end of the Menu, when EXIT is displayed, you have to press the **ENTER** button to leave the supply Menu.

P:Soap Supply
Menu Exit

↵

⚠ **Attention !**

For Front Soap Hopper washing machines, the soap is added by programming the supplies A to E. (X22/5 A to D)

External liquid soap pumps correspond with the supplies F to K.

For Top Soap Hopper washing machines, the External liquid soap pumps correspond with the supplies D to J.

The number of external supplies that is available depends on the machine type.

P:Pr XX Step XX
Spray 1 : No

P:Pr XX Step XX
Spray 2 : No

X & XF - Type machines Only

- Spray 1 : cold water
- Spray 2 : warm water
- The Spray Inlet will be open for the programmed time.
- Yes : Spray inlet enabled.
  No : Spray inlet disabled.
- Press the **ENTER** button for confirmation.

P:Pr XX Step XX
Time : 1.0 Min

X & XF - Type machines Only

- The Step Time can only be inserted when no supply has been programmed.
- The Spray Sequence can be programmed between 0 and 99

minutes in steps of 0.5 minutes.

- The default time is 1,0 Minutes.
- Programming a time of 0 minutes : the Spray will not be functional (cfr No Wash)
- Enter the desired spray time. Press the **ENTER** button for confirmation.

P:Pr XX Step XX
Signal : No

- When a signal is programmed, a pause will be introduced at the end of the Wash Step. This allows the operator to add soap for the next step. To alert the operator that the program has been interrupted, a buzzer signal will be activated.
  By pressing the **START** button, the program will continue.
- Yes : Signal enabled.
  No : Signal disabled.
- Press the **ENTER** button for confirmation.
  Goto ⑤ ☞

❑ THE NO WASH SEQUENCE

Prewash | Wash | Cooldown | Rinse | Final Rinse | Soak | Flush | Spray | **No wash**

- The wash function of the programmed step is skipped.
  Goto ⑤ ☞

5.6. STEP ⑤ : PROGRAMMING THE DRAIN STEP

This paragraph gives a detailed explanation about programming the Drain/Extraction Sequences.

After programming the wash step, the drain step still has to be programmed.

⚠ **ATTENTION !**
YOU DON'T HAVE TO PROGRAM A DRAIN SEQUENCE BEFORE AN EXTRACTION SEQUENCE AS THE WATER WILL AUTOMATICALLY BE DRAINED AT THE EXTRACTION SEQUENCE

❑ SELECTING THE DRAIN/EXTRACTION STEP

Depending the machine type, you have more or less functions.

P:Pr XX Step XX
Drain

▼

- For a new step, the first sequence that is displayed is the Drain sequence (default).
- Select the desired Drain step sequence from the list by pressing the **ARROW LEFT** or **RIGHT** button.
- Press the **ENTER** button to confirm your selection.
- You can also use the **ARROW DOWN** button if you accept the pre-programmed default value.

Drain | Extract | Low Extract | High Extract | No Drain | Static Drain

❑ THE DRAIN SEQUENCE

Drain | Extract | Low Extract | High Extract | No Drain | Static Drain

P:Pr XX Step XX
Drain valve : 1

▼

1 | 2 | 1+2

- **Only available on washing machines with both : a normal Open and a normal Closed Drain valve.**
- You can select Drain Valve 1 or 2.
- The default Drain valve is Drain valve 1.
- You have to select the desired Drain Valve by pressing the **ARROW LEFT** or **RIGHT** button.
- Press the **ENTER** button for confirmation.

P:Pr XX Step XX
Time : 0,5 Min

▼

- The Drain Sequence can be programmed between 0 and 9.5 minutes in steps of 0.5 minutes.
- The default time is 0.5 Minutes.
- Programming a time of 0 minutes : the Drain step will not be functional (cfr No Drain)
- Insert the desired Drain sequence time. Press the **ENTER** button for confirmation.

P: Program
Step XX Exit

↵

- You can always return to a previous menu item by pressing the **ARROW UP** button.
- By pressing the **ENTER** button you will leave the current Step. Goto ③ ✐

⚠ **ATTENTION !**
R - MACHINES ONLY. THE REVERSING ON – OFF TIMES FOR THE DRAIN SEQUENCE ARE THE SUGESTED DEFAULT VALUES. SEE THE INITIALISATION MENU.

❑ THE EXTRACT SEQUENCE

Drain | **Extract** | Low Extract | High Extract | No Drain | Static Drain

Only for washing machines with 1 motor. (INVERTER DRIVE)

P:Pr XX Step XX
Drain valve : 1

▼

1 | 2 | 1+2

- **Only available on washing machines with both : a normal Open and a normal Closed Drain valve.**
- You can select Drain Valve 1 or 2.
- The default Drain valve is Drain valve 1.
- You have to select the a Drain Valve by pressing the **ARROW LEFT** or **RIGHT** button.
- Press the **ENTER** button for confirmation.

P:Pr XX Step XX
RPM : _ _ _

▼

- *The programmable speed depends on the machine type.*
- *For the correct speed values and speed limits See* paragraph 3.4.

P:Pr XX Step XX
Time : 4,5 Min

▼

- The Extract Sequence can be programmed between 0 and 9.5 minutes in steps of 0.5 minutes.
- The default time is 4.5 Minutes.
- Programming a time of 0 minutes : the Extract part will not be functional (cfr No Drain)
- Insert the desired Extract sequence time. Press the **ENTER** button for confirmation.

P: Program
Step XX Exit

↵

- You can always return to a previous menu item by pressing the **ARROW UP** button.
- By pressing the **ENTER** button you will leave the current Step. Goto ③ ✐

❑ THE LOW EXTRACT SEQUENCE

Drain | Extract | **Low Extract** | High Extract | No Drain | Static Drain

Only for washing machines with 2 motors.

P:Pr XX Step XX
Drain valve : 1

▼

1 | 2 | 1+2

- **Only available on washing machines with both : a normal Open and a normal Closed Drain valve.**
- You can select Drain Valve 1 or 2.
- The default Drain valve is Drain valve 1.
- You have to select the desired a Drain Valve by pressing the **ARROW LEFT** or **RIGHT** button.
- Press the **ENTER** button for confirmation.

P:Pr XX Step XX
Time : 1,0 Min

▼

- The Low Extract Sequence can be programmed between 0 and 9.5 minutes in steps of 0.5 minutes.
- The default time is 1.0 Minute.
- Programming a time of 0 minutes : the Low Extract part will not be functional (cfr No Drain)
- Insert the desired Low Extract sequence time.
  Press the **ENTER** button for confirmation.

P: Program
Step XX Exit

↵

- You can always return to a previous menu item by pressing the **ARROW UP** button.
- By pressing the **ENTER** button you will leave the current Step. Goto ③ ⇨

❑ THE HIGH EXTRACT SEQUENCE

Drain | Extract | Low Extract | **High Extract** | No Drain | Static Drain

Only for washing machines with 2 motors.

P:Pr XX Step XX
Drain valve : 1

▼

1 | 2 | 1+2

- **Only available on washing machines with both : a normal Open and a normal Closed Drain valve.**
- You can select Drain Valve 1 or 2.
- The default Drain valve is Drain valve 1.
- You have to select the desired a Drain Valve by pressing the **ARROW LEFT** or **RIGHT** button.
- Press the **ENTER** button for confirmation.

P:Pr XX Step XX
Time : 4,5 Min

▼

- The High Extract Sequence can be programmed between 0 and 9.5 minutes in steps of 0.5 minutes.
- The default time is 4.5 Minutes.
- Programming a time of 0 minutes : the High Extract step will not be functional (cfr No Drain)
- Insert the desired High Extract sequence time.
  Press the **ENTER** button for confirmation.

P: Program
Step XX Exit

↵

- You can always return to a previous menu item by pressing the **ARROW UP** button.
- By pressing the **ENTER** button you will leave the current Step. Goto ③ ✐

❑ THE NO DRAIN SEQUENCE

Drain | Extract | Low Extract | High Extract | **No Drain** | Static Drain

- The Drain/Extraction part of the programmed step is skipped.

⚠ **Attention !!!**

For some specific functions "No Drain" must be programmed.

Example:

If you want to program a Cool-down Sequence, then "No Drain" must be programmed between the Hot Wash and the Cool-down Sequence.

P: Program
Step XX Exit

↵

- You can always return to a previous menu item by pressing the **ARROW UP** button.
- By pressing the **ENTER** button you will leave the current Step. Goto ③ ✐

❑ THE STATIC DRAIN SEQUENCE

Drain | Extract | Low Extract | High Extract | No Drain | **Static Drain**

The drum is at standstill while the water is drained.

P:Pr XX Step XX
Drain valve : 1

▼

1 | 2 | 1+2

- **Only available on washing machines with both : a normal Open and a normal Closed Drain valve.**
- You can select Drain Valve 1 or 2.
- The default Drain valve is Drain valve 1.
- You have to select the desired Drain Valve by pressing the **ARROW LEFT** or **RIGHT** button.
- Press the **ENTER** button for confirmation.

P:Pr XX Step XX
Time : 0,5 Min

▼

- The Drain Sequence can be programmed between 0 and 9,5 minutes in steps of 0,5 minutes.
- The default time is 0,5 Minutes.
- Programming a time of 0 minutes : the Drain part will not be functional (cfr No Drain)
- Insert the desired Drain sequence time. Press the **ENTER** button for confirmation.

P: Program
Step XX Exit

↵

- You can always return to a previous menu item by pressing the **ARROW UP** button.
- By pressing the **ENTER** button you will leave the current Step. Goto ③ ✍

⚠ **Attention !!!**

It's not recommended to program a spin sequence just after a Static Drain Sequence.

At a Static Drain sequence, the garments are not distributed around the drum while the water is drained.

When the spin sequence starts, the garments are a big imbalance and the imbalance (tilt) function will be activated.

6. OPERATION MENU

6.1. STARTING UP

⚠ **ATTENTION !!!**
BEFORE STARTING UP THE FIRST TIME, BE SURE THAT THE MACHINE IS WELL INSTALLED. SEE INSTALLATION MANUAL.
MAKE SURE THAT THE CONFIGURATION AND INITIALISATION MENU HAVE THE RIGHT SETTINGS. SEE CHAPTER 4.

⚠ **ATTENTION !!!**
WASH CYCLES CAN ONLY BE STARTED WHEN THE KEY SWITCH IS IN RUN MODE.

6.2. SWITCHING ON THE POWER

☞ The display lights up when you switch on the power.

- If the program is ready to be started, **Select Process** _ _ is displayed.

6.3. LOAD THE WASHING MACHINE

☞ Open the door and load the laundry into the drum. When the drum is loaded, close the door.

X-F120 machine :
You can open the door by pressing the door unlock button and by pressing the door handle at the same time.

6.4. PUT SOAP INTO THE SOAPHOPPER

☞ Put the correct amount of soap into the soap hopper.

Front Soap Hopper washing machines,

101009

- At the wash step, it depends on the programmed supplies in which part A, B, C, D or E of the soap box you need to add the soap.

Top Soap Hopper washing machines:

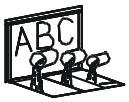

101008

- At the wash step, it depends on the programmed inlets in which part A, B or C of the soap box you need to add the soap.

➔ See paragraph 3.3. for more information

6.5. STARTING A WASH PROGRAM

- Up to 99 programs can be selected. The first 15 are the standard Wash programs you can find in this manual at Paragraph 7.2.

☞ Insert the program number.

☞ Press the „**START**“ button.

- If there is no program available for a specific program number, **INVALID** is displayed.

MB-machines only.

- After pressing the **„START“** button a message appears with the request to verify if you have locked the Inner Door.

Did you lock
the Inner Door ?

☞ Press the **„START“** button if you are sure that you have locked the Inner Doors mechanically. If you are not sure press the “**STOP**” button and check the Inner Doors visually.

6.6. PROGRAMMING A DELAY TIME

☞ Enter the selected Program Number.

☞ Press the Dot button.

The Delay time message will be displayed.

➔ The Door and the Soap Door must be closed first.

☞ Now you can insert the value for a delay time

Delay _ _ **:** _ _

➔ First insert a value for the Hours, then insert a value for the Minutes

➔ The minimum delay time is 1 minute [00:01]

➔ The maximum delay time is 99 hours and 59 minutes [99:59]

☞ By pressing the **START** button, the delay time will start to decrease.

➔ The Door will be locked immediately.
Once the delay time is over, the wash cycle will start automatically.

➔ The Delay Time Sequence can be interrupted by pressing the **Stop** button.
The program will return to the Start Up menu : **Select Process** _ _ .

6.7. ECONOMIC

☞ If you accept the selection ECONOMIC at the Start of a new cycle by pressing the **YES** button, the water level will be lowered by 20% (in units) in accordance with the programmed level.

☞ If you don‘t want an ECONOMIC level, press the **NO** button.

- ECONOMIC water levels should only be used for lightly soiled and/or smaller volumes of garments. In other cases these reduced water levels will give poor washing quality.
- In the Initialisation Menu you can enable/disable the request for ECONOMIC at Start UP.

6.8. THE ACTIVE PROGRAM

- The cycle time will decrease minute by minute and gives you an indication how long it will take before the cycle is finished.
- For each Wash program Step :
  - first you will see the Wash Sequence
  - then you will see the Drain / Extraction Sequence
- A row of bars, shows you if the Sequence has just been started or if ¼, ½ or ¾ of the Sequence time is over.

PrXX StYY	**ZZ.Z Min**
Wash	■ ■ □ □

PrXX	: The selected program number.
StYY	: The selected program Step.
ZZ.Zmin or ZZ.Z H	: The remaining program time in 1/10 of Minutes or 1/10 of Hours.
■ ■ □ □	: A row of bars appears as a function of the remaining sequence time.
Wash	: The executed Sequence. (example, Wash)

6.9. ADVANCING A WASH PROGRAM

☞ Press the **ARROW RIGHT** button to increase the wash sequence time.

☞ Press the **ARROW LEFT** button to decrease the wash sequence time.

☞ Press the **START** button to skip the current step.
>> >> is displayed instead of the remaining time at the moment that the step is skipped.

⚠ **ATTENTION !!!**
EVEN IF THE ADVANCE FUNCTION HAS BEEN SWITCHED OFF IN THE INITIALISATION MENU, THE ADVANCE FUNCTION WILL WORK IF THE KEY SWITCH IS TURNED INTO PROGRAM MODE.

6.10. WASH TIME

- Once the program has been started, the remaining cycle time is displayed.
- Sometimes the dot of the displayed time stops blinking to indicate that the time on the display stops counting down.
- The time that the dot stops blinking is extra time.
- The total wash time = programmed time (1) + the extra time (2+3+4+5)
    1. The programmed time of the processes.
    2. The extra time for taking water.
    3. The extra time for draining (if the water is not drained in 30 sec and the extended drain time is started)
    4. The extra time for heating if „Wait for temperature“ is selected.
    5. The extra free run time at the end of the spin sequence.

6.11. PROGRAM END

- The time on the display counts down until 0.
- Once the program cycle is finished, **END PROGRAM** is displayed.
- The Door Lock will be released. You can open the Door when **UNLOAD** appears on the Display.

☞ Open the door and unload the machine.

- The Message **UNLOAD** will be erased and the machine is ready to start a new program.

SELECT PROCESS _ _ is displayed.

Only for X80 and X100 machines :

*The door can be opened by pressing the **DOOR UNLOCK** button and by pressing the Door Handle when the message **UNLOAD** is displayed.*

❑ **MB washing machines only**

- When the message Unload is displayed, the indication lights **TURN DRUM** and **UNLOCK DOOR** will be illuminated.
- The buttons will only be functional if their indication lights are illuminated at the dirty or the hygienic side of the washing machine.

The Unload Sequence.

- By pressing the **TURN DRUM** push button, you have to turn the drum so that the Door of the drum can be opened just in front of the Main door of the MB washing machine. By releasing the push button the Drum stops turning.
- If the weight of the garments in the drum is not well balanced, than it can happen that you have to try to position the Door of the Drum a few times.
- By pressing the **DOOR UNLOCK** button the Main door of the MB machine will be Unlocked.
- Open the doors by hand.
- Now you can Unload the garmets.

The Load Sequence.

The garmets are always loaded at the Dirty side.

- If the program has not been interrupted, the doors are now open at the Hygenic side.
- Close and Lock the Doors.
- The indication lights **TURN DRUM** and **UNLOCK DOOR** will be extinguished at the Hygenic side and be Eluminated at the Dirty side.
- Now you have to position the Drum Door just in front of the Main Door at the Dirty Side.
- If the Door of the drum is well positioned, Unlock and open the Doors.
- Now you can Load the garments.
- After closing the doors, you can start a new wash cycle.

⚠ **ATTENTION !!!**
THE FULL CONTROL WASH COMPUTER FOR A MB WASHING MACHINE WILL ONLY ALLOW TO UNLOAD THE GARMETS AT THE HYGENIC SIDE OF THE MACHINE IF THE WASH CYCLE HAS NOT BEEN INTERUPTED.

⚠ **ATTENTION !!!**
IN CASE OF HYGIENIC DESINFECTIVE WASH PROGRAMS IN THE INITIALISATION MENU "MANUAL OVERRIDE" & "ALLOW ADVANCE" MUST BE SWITCHED OFF

❑ **MB washing machines 90 – 140 – 180 only**

- The biggest MB washing machines contain two are three drum compartments.
- After unloading / loading the linen at one compartment you have to turn the drum to the next compartment.
- Close and lock the Inner Door.
- Close the Outer Door and press the door lock button to lock the Outer Door.
- When the Outer Door is closed and locked, the indication lights TURN DRUM and UNLOCK DOOR will be eluminated.

- By pressing the TURN DRUM push button the drum will turn automatically to the next drum compartment.
- When the drum has stopped and the indication light UNLOCK DOOR is eluminated, press the UNLOCK DOOR button.
- Now you can unload / load the drum at the next compartment.

- On the small MB washing machines after closing and locking the Outer Door at the Hygienic Side automatically the wash computer switches the door and turn drum control to the Dirty Side.
- For the big MB washing machines with multiple drum compartments, you have to press the "**SWITCH SIDE**" button to switch over from Hygienic to Dirty Side.

6.12. WATER FILL PROCESS

- Depending the water temperature the cold and hot inlet valves will be opened.
- The water level is measured by an electronic water level sensor.
- If the Temperature Balance function is enabled, the Full Control Wash Computer will control the water temperature until the target temperature is reached. For Hot wash programs, extra heating will be required after the fill process to reach the programmed hot water temperature.
- In the standard wash tables you will find a Normal Low and Normal High water level.
- These are the standard water levels :
  - The Normal Low water level is used for the Prewash, Wash and Soak sequence.
  - The Normal High water level is used for the Rinse and Final Rinse sequence.

- The water level can only be programmed between two limits:
  - The lower limit is above the heating elements and the temperature sensor.
  - The upper limit is below the overflow hole.

6.13. HEATING PROCESS

- When "No Wait for Temperature" (No Wait for Heat) is selected :
  - The machine will heat until the time of the specific wash step is over or if the programmed temperature was reached.
  - Even if the programmed temperature is not reached, the program will start the next sequence if the time of the sequence is over.
- When „Wait for Temperature" (Wait for Heat) is selected:
  - The machine will heat until the programmed temperature is reached. The programmed time of the wash sequence will only start counting down from the moment that the target temperature was reached.

⚠ **ATTENTION !!!**
WHEN THE MACHINES DO NOT HAVE ELECTRICAL OR STEAM HEATING NO „WAIT FOR TEMPERATURE" SHOULD BE SELECTED IN THE INITIALISATION MENU.

6.14. COOLDOWN FUNCTION

- AUTOMATIC COOLDOWN : this function avoids thermal shock in the washing machine.
  ➔ For Hot washes above 65°C, Cold water is added at the end of the step.
- PROGRAMMED COOLDOWN : this function is recommended to avoid the shrinking of the garments.
  ➔ Water is drained and cold water is added bit by bit. The temperature of the water in the tub will decrease slowly as a function of the programmed Cool-down Sequence (temperature and time).

6.15. FLUSH FUNCTION

Only for machines with a Top Soap Hopper.

- At the Fill process of the Flush sequence, No water level is programmed and the water will escape by the overflow hole.
- The larger soil particles will get separated from the garments due to the water that is draining through the overflow hole.

6.16. SPRAY FUNCTION

For machines with a Spray inlet.

- The spray function can be programmed instead of a rinse.
- Water will be injected by the spray-head in the door glass.
- The drain valve is open and depending the programmed speed, the drum will spin at distribution or low spin speed.

For special applications.

- Instead of injecting water by the spray head at the door glass, it‘s also possible to program a supply.
- The product will be injected while the drain valve is open and depending the programmed speed, the drum will spin at distribution or low spin speed.

6.17. UNBALANCE

- When the machine is badly loaded during the spin sequence, then the tilt switch will get activated.
- The spin sequence will be interrupted and the garments in the drum will be redistributed.
- The washing machine will try up to 10 times to redistribute the laundry.

6.18. PAUSE

- When a signal has been programmed, at the end of a wash sequence, the machine will stop the Program and the message **CONTINUE?** will be displayed.
- The buzzer will give a warning for the operator.
- Now the operator can add Soap.
- By opening the Soap Door, the buzzer is switched off.
  (Only for Front Soap Hopper Washing Machines)
- By pressing the **START** button the PROGRAM will go on with the next Program step.

6.19. STOP

- By pressing the **STOP** button the program is interrupted.
- First the machine will go over to a safe state.
- Then the message **CONTINUE ?** is displayed.

☞ **STOP** : the program is stopped. (A tumble sequence will be executed before the door can be opened.)

☞ **START** : the program restarts the last active step, and goes on with the rest of the program.

6.20. OPEN SOAP BOX

ONLY FOR WASHING MACHINES WITH FRONT SOAP BOX

- By opening the soap box, the Program is interrupted at once.
- First the machine will go over to a safe state.
- Then the message **CLOSE SOAP DOOR** is displayed.
- Once the soap box is closed again, the message **CONTINUE ?** will be displayed.

☞ **STOP** : the program is stopped. (A tumble sequence will be executed before the door can be opened.)

☞ **START** : the program restarts the last active step, and goes on with rest of the program.

- It's recommended to program a pause (signal) if you want to fill the same soap hopper twice while the program is running.

6.21. WAIT STATE

- It can occur that the normal machine operation has been interrupted and that you have to wait until the Full Control Wash Computer allows you to go on.
- You can recognize the wait state by a display that shows **WAIT** and a decreasing counter.
- This will occur when the power has been switched off and on at a running wash cycle.
- As the software doesn't know how fast the motor was spinning, a delay time is respected before the machine can be restarted.

6.22. HOW TO HANDLE FAILURE MESSAGES

- When a failure has been detected by the Full Control Wash Computer, a failure message is generated, to inform the operator about the problem.

```
PrAA StBB  Unload !
EXXX:YYYYYYYYYYYY
```

AA	: The Program number
BB	: The Step number
Unload !	: If it is allowed to open the door, the message Unload is displayed
E XXX	: The error number
YYYYYYYY	: The name of the error message

- At the upper left corner, the program number and step number of the interrupted program are displayed.
- The message **UNLOAD !** will inform you if it's allowed to open the door.

❑ **Safety conditions**

- If there is still water in the drum or if the temperature is too high, it's not possible to open the door.
- The messages „**WATER IN CAGE**" or „**TOO HOT**" will be displayed together with the level and the temperature.

⚠ **ATTENTION !!!**
IT'S UP TO THE OPERATOR TO TAKE THE NECESSARY PRECAUTIONS IF THE DRAIN VALVE IS NOT FUNCTIONAL AND THERE IS STILL HOT WATER IN THE TUB AT THE END OF THE WASH CYCLE.
ON THE DISPLAY THE ACTUAL WATER TEMPERATURE AND LEVEL WILL BE DISPLAYED.
WAIT UNTIL THE WATER IS DRAINED AND UNTIL THE WATER HAS COOLED BEFORE ALL INTERVENTIONS AS HOT WATER CAN CAUSE BURNS.

- If something goes wrong with the door lock, the program will be finished immediately.
- For safety purposes, the door will stay locked.

⚠ **ATTENTION !!!**
GO TO THE CHAPTER 8 TROUBLE SHOOTING TO FIND OUT MORE ABOUT ERROR HANDLING.

6.23. HOW TO HANDLE POWER INTERUPTIONS

- When a power interruption occurs while the machine is in standby mode and no program cycle was started, the machine will stay in standby mode.
- When a power interruption occurs while the machine is washing or spinning, after the power interruption, the message **Continue ?** will be displayed.

☞ **STOP** : the program is stopped. (A tumble sequence will be executed before the door can be opened.)

☞ **START** : the program restarts the last active step, and goes on with the rest of the program.

6.24. SPECIAL FUNCTION BUTTONS

The Special Function buttons **Info** and **Service** are dedicated to supply the operator with more information about the wash programs and the wash machine functions.
The other Special Function buttons allow direct operation.

6.24.1. INFO

☞ Press the **INFO** button if you want to find out what a program looks like.

- If no Program number has been selected, you will get an overview of all the available programs.
- If a Program number has been selected, you will get a detailed list of the program functions, step by step.
- By pressing the **ARROW DOWN** button you will see all the menu items.
- At the end of a step, EXIT is displayed. By pressing the **ENTER** button you will go over to the next step.
- You can leave the Info menu by pressing the **INFO** button again.

6.24.2. SERVICE - STATE

☞ Press the **SERVICE-STATE** button if you want to inspect the actual water temperature and level.

- At the Service - State menu, you can inspect :
  - the water temperature and water level
  - the number of cycles that have been accumulated (service due)

- the actual wash machine states at the running wash cycle
- By turning the key switch to Program, the Service-State menu will not disappear after 1 minute.
- By pressing the **ARROW DOWN** button you will see all the menu items.
- You can leave the Service - State menu by pressing the **SERVICE-STATE** button again.

6.24.3. INLETS 1, 2, 3 (4, 5, 6)

☞ Press **INLET** button **1, 2, 3 (4 , 5, 6)** if you want to open a water Inlet valve at a running process.

- Only functional at a running wash sequence.
- The corresponding inlet valve will be opened while you are pressing the button.

⚠ **ATTENTION !!!**
ALL THE SAFETY FUNCTIONS WILL STILL BE FUNCTIONAL, SO IT CAN OCCUR THAT YOU CAN'T ACTIVATE THE INLETS.

6.24.4. DRAIN

☞ Press the **DRAIN** button if you want to open the drain valve at a running process.

- Only functional at a running **wash** sequence.
- The drain valve will be opened for the time you are pressing the button.

6.24.5. HEATING

☞ Press the **HEATING** button if you want to switch On the heating at a running process.

- Only functional at a running wash sequence.
- The Heating will be switched on for the time you are pressing the button.

⚠ **ATTENTION !!!**
ALL THE SAFETY FUNCTIONS WILL STILL BE FUNCTIONAL, SO IT CAN OCCUR THAT YOU CAN'T ACTIVATE THE HEATING.

6.24.6. SPEED ADJUST

☞ *Press the **SPEED ADJUST** button if you want to change the drum speed at a running process.*

- *You can adjust the drum speed by inserting a new value.*
- *The speed limits will be respected depending the washing machine type.*

⚠ ***ATTENTION !!!***
ALL THE SAFETY FUNCTIONS WILL STILL BE FUNCTIONAL, SO IT CAN OCCUR THAT YOU CAN'T CHANGE THE SPIN SPEED.

6.25. WATER RECYCLING

- If the washing machine is connected with a water recycling system, a signal from the water recycling tank can be connected to the Full Control washing machine computer.
- If the tank is empty, then the message **NO RECUP** will be generated on the display of the Full Control Wash Computer.
- For the Washing machines with Front Soap Hoppers, automatically the Inlet valve for the water recycling tank will be switched off and the Cold water inlet valve will be switched on.

6.26. EXTERNAL LIQUID SOAP BOXES

- If the washing machine is connected with external soap pumps, a signal from the soap supply reservoir can be connected to the Full Control washing machine computer.
- If the Soap box is almost empty, then a message will be generated on the display of the Full Control Wash Computer.
- So the operator does not have to check the soap boxes continuously to avoid washing without soap.

7. PRE-PROGRAMMED PROGRAMS

The Full Control Wash Computer contains 15 pre-programmed Standard Wash Programs.

(Standard Programs : 1 to 15. Programs 16 to 52 are dedicated.)

⚠ **ATTENTION !!!**
THE PRE-PROGRAMMED PROCESSES ARE GIVEN AS AN EXAMPLE ONLY.
FOR THE CREATION OF YOUR OWN WASH PROGRAM'S, CONTACT YOUR SOAP SUPPLIER.

7.1. LEGEND

❑ SUPPLY TIMES

The water supply time for hopper A, B, C, D and E is default 30 seconds and can be adjusted in the Program menu.

❑ WATER INLETS (VALVES)

- Machines with TOP SOAP HOPPER

- Inlet Valve **1** :	Cold Hard Water *(*)*	Soap Hopper "C"	Final Rinse
- Inlet Valve **2** :	Cold Soft Water	Soap Hopper „A"	Pre wash
- Inlet Valve **3** :	Hot Soft Water	Direct Inlet (Liquid)	
- Inlet Valve **4** :	Hot Soft Water	Soap Hopper „B"	Main Wash
- Inlet Valve **5** :	Cold Soft Water	Soap Hopper „B"	Main Wash
- Inlet Valve **6** :	Cold Soft Water	Direct Inlet (Liquid)	

(*) If No Cold Hard water is available, then Inlet Valve 1 will function with Cold Soft Water.

- Machines with FRONT SOAP HOPPER

- Inlet Valve **1** :	Cold Hard water (Inlet Valve 1 is not operational, if no hard water is available)
- Inlet Valve **2** :	Cold Soft water
- Inlet Valve **3** :	Hot Soft water

❑ WATER LEVEL

- **NL**: **N**ormal **L**ow level
- **NH**: **N**ormal **H**igh level

❑ WASH ACTION

- Normal Wash Action
  - **A** = **12"** 12 Seconds Action
  - **R** = **3**" 3 Seconds Rest
- Gentle Wash Action
  - **A** = **3"** 3 Seconds Action
  - **R** = **12"** 12 Seconds Rest

❑ RPM (REVOLUTIONS PER MINUTE)

- **W** :	type R/F/X =	Washing Speed (≈ 40 – 42 RPM)
	type RF/FF/XF/MB =	Washing Speed (≈ 32 – 50 RPM)
- **D** :	type R =	Washing Speed (≈ 40 – 42 RPM)
	type F/X =	Distribution Speed (≈ 100 RPM)
	type RF/FF/XF/MB =	Distribution Speed (not changeable) (≈ 100 RPM)
- **L** :	type R =	Extraction speed (≈ 500 RPM)
	type F/X =	Low extraction speed (≈ 500 RPM)
	type RF/FF/XF/MB	Low extraction speed, standard (≈ 500 RPM)
- **H** :	type R/RF =	Extraction speed (≈ 500 RPM)
	type F/X =	1 Minute Low (≈ 500 RPM)
		+ rest high extraction speed (≈ 850 – 1000 RPM)
	type FF/XF/MB =	High extraction speed (≈ 625 – 1000 RPM)
		(depending the size of the machine)

7.2. WASH PROGRAMS

❑ WASH PROGRAM 1: HOT WASH – 90°C

	Sequence		Supply		Inlet		Temp.	Level	Wash action	Time	R.P.M.
	Top	Front	Top	Front	Top	Front					
Step 1	Prewash	Wash	A	A=30“	2-3	2-3	35°C	NL	A=12“ R=3“	6 min	W
	Spin	Spin	-	-	-	-	-	-	-	1 min	L
Step 2	Wash	Wash	B	B=30“	3-4-5	2-3	90°C	NL	A=12“ R=3“	10 min	W
	Drain	Drain	-	-	-	-	-	-	-	30 sec	D
Step 3	Rinse 1	Rinse 1	-	-	2-5-6	2	-	NH	A=12“ R=3“	2 min	W
	Spin	Spin	-	-	-	-	-	-	-	1 min	L
Step 4	Rinse 2	Rinse 2	-	-	2-5-6	2	-	NH	A=12“ R=3“	2 min	W
	Spin	Spin	-	-	-	-	-	-	-	1 min	L
Step 5	Final Rinse	Rinse 3	C	D=30“	1(+6)	1(2)	-	NL	A=12“ R=3“	3 min	W
	Spin	Spin	-	-	-	-	-	-	-	6 min	H
	Slowdown		-	-	-	-	-	-	-	1 min	-
	Tumble		-	-	-	-	-	-	A=12“ R=3“	30 sec	W

❑ WASH PROGRAM 2: WARM WASH – 60°C

	Sequence		Supply		Inlet		Temp.	Level	Wash action	Time	R.P.M.
	Top	Front	Top	Front	Top	Front					
Step 1	Prewash	Wash	A	A=30“	2-3	2-3	35°C	NL	A=12“ R=3“	6 min	W
	Spin	Spin	-	-	-	-	-	-	-	1 min	L
Step 2	Wash	Wash	B	B=30“	3-4-5	2-3	60°C	NL	A=12“ R=3“	10 min	W
	Drain	Drain	-	-	-	-	-	-	-	30 sec	D
Step 3	Rinse 1	Rinse 1	-	-	2-5-6	2	-	NH	A=12“ R=3“	2 min	W
	Spin	Spin	-	-	-	-	-	-	-	1 min	L
Step 4	Rinse 2	Rinse 2	-	-	2-5-6	2	-	NH	A=12“ R=3“	2 min	W
	Spin	Spin	-	-	-	-	-	-	-	1 min	L
Step 5	Final Rinse	Rinse 3	C	D=30“	1(+6)	1(2)	-	NL	A=12“ R=3“	3 min	W
	Spin	Spin	-	-	-	-	-	-	-	6 min	H
	Slowdown		-	-	-	-	-	-	-	1 min	-
	Tumble		-	-	-	-	-	-	A=12“ R=3“	30 sec	W

❑ WASH PROGRAM 3: COLORED WASH – 40°C

	Sequence		Supply		Inlet		Temp.	Level	Wash action	Time	R.P.M.
	Top	Front	Top	Front	Top	Front					
Step 1	Prewash	Wash	A	A=30“	2-3	2-3	35°C	NL	A=12“ R=3“	4 min	W
	Spin	Spin	-	-	-	-	-	-	-	1 min	L
Step 2	Wash	Wash	B	B=30“	3-5	2-3	40°C	NL	A=12“ R=3“	7 min	W
	Drain	Drain	-	-	-	-	-	-	-	30 sec	D
Step 3	Rinse 1	Rinse 1	-	-	2-5-6	2	-	NH	A=12“ R=3“	2 min	W
	Spin	Spin	-	-	-	-	-	-	-	1 min	L
Step 4	Rinse 2	Rinse 2	-	-	2-5-6	2	-	NH	A=12“ R=3“	2 min	W
	Spin	Spin	-	-	-	-	-	-	-	1 min	L
Step 5	Final Rinse	Rinse 3	C	D=30“	1(+6)	1(2)	-	NL	A=12“ R=3“	3 min	W
	Spin	Spin	-	-	-	-	-	-	-	5 min	H
	Slowdown		-	-	-	-	-	-	-	1 min	-
	Tumble		-	-	-	-	-	-	A=12“ R=3“	30 sec	W

❑ WASH PROGRAM 4: BRIGHT COLORED WASH – 30°C

	Sequence		Supply		Inlet		Temp.	Level	Wash action	Time	R.P.M.
	Top	Front	Top	Front	Top	Front					
Step 1	Wash	Wash	B	B=30“	3-5-6	2-3	30°C	NL	A=12“ R=3“	7 min	W
	Drain	Drain	-	-	-	-	-	-	-	30 sec	D
Step 2	Rinse 1	Rinse 1	-	-	2-5-6	2	-	NH	A=12“ R=3“	2 min	W
	Drain	Drain	-	-	-	-	-	-	-	30 sec	D
Step 3	Rinse 2	Rinse 2	-	-	2-5-6	2	-	NH	A=12“ R=3“	2 min	W
	Drain	Drain	-	-	-	-	-	-	-	30 sec	D
Step 4	Final Rinse	Rinse 3	C	D=30“	1(+6)	1(2)	-	NL	A=12“ R=3“	3 min	W
	Spin	Spin	-	-	-	-	-	-	-	3 min	H
	Slowdown		-	-	-	-	-	-	-	1 min	-
	Tumble		-	-	-	-	-	-	A=12“ R=3“	30 sec	W

❑ WASH PROGRAM 5: WOOLENS – 15°C

	Sequence		Supply		Inlet		Temp.	Level	Wash action	Time	R.P.M.
	Top	Front	Top	Front	Top	Front					
Step 1	Wash	Wash	B	B=30“	5-6	2	15°C	NH	A=3“ R=12“	5 min	W
	Drain	Drain	-	-	-	-	-	-	-	30 sec	D
Step 2	Rinse 1	Rinse 1	-	-	2-5-6	2	-	NH	A=3“ R=12“	1,5 min	W
	Drain	Drain	-	-	-	-	-	-	-	30 sec	D
Step 3	Rinse 2	Rinse 2	-	-	2-5-6	2	-	NH	A=3“ R=12“	1,5 min	W
	Drain	Drain	-	-	-	-	-	-	-	30 sec	D
Step 4	Final Rinse	Rinse 3	C	D=30“	1(+6)	1(2)	-	NL	A=3“ R=12“	2 min	W
	Spin	Spin	-	-	-	-	-	-	-	2 min	L
	Slowdown		-	-	-	-	-	-	-	1 min	-
	Tumble		-	-	-	-	-	-	A=3“ R=12“	30 sec	W

❑ WASH PROGRAM 6: LIGHTLY SOILED - HOT WASH - 90°C

NO PREWASH

	Sequence		Supply		Inlet		Temp.	Level	Wash action	Time	R.P.M.
	Top	Front	Top	Front	Top	Front					
Step 1	Wash	Wash	B	B=30“	3-4-5	2-3	90°C	NL -3	A=10“ R=5“	10 min	W
	Drain	Drain	-	-	-	-	-	-	-	30 sec	D
Step 2	Rinse 1	Rinse 1	-	-	2-5-6	2	-	NH -3	A=10“ R=5“	2 min	W
	Spin	Spin	-	-	-	-	-	-	-	1 min	L
Step 3	Rinse 2	Rinse 2	-	-	2-5-6	2	-	NH -3	A=10“ R=5“	2 min	W
	Spin	Spin	-	-	-	-	-	-	-	1 min	L
Step 4	Final Rinse	Rinse 3	C	D=30“	1(+6)	1(2)	-	NL -3	A=10“ R=5“	3 min	W
	Spin	Spin	-	-	-	-	-	-	-	5 min	H
	Slowdown		-	-	-	-	-	-	-	1 min	-
	Tumble		-	-	-	-	-	-	A=10“ R=5“	30 sec	W

❑ WASH PROGRAM 7: LIGHTLY SOILED - WARM WASH - 60°C NO PREWASH

	Sequence		Supply		Inlet		Temp.	Level	Wash action	Time	R.P.M.
	Top	Front	Top	Front	Top	Front					
Step 1	Wash	Wash	B	B=30“	3-4-5	2-3	60°C	NL -3	A=10“ R=5“	10 min	W
	Drain	Drain	-	-	-	-	-	-	-	30 sec	D
Step 2	Rinse 1	Rinse 1	-	-	2-5-6	2	-	NH -3	A=10“ R=5“	2 min	W
	Spin	Spin	-	-	-	-	-	-	-	1 min	L
Step 3	Rinse 2	Rinse 2	-	-	2-5-6	2	-	NH -3	A=10“ R=5“	2 min	W
	Spin	Spin	-	-	-	-	-	-	-	1 min	L
Step 4	Final Rinse	Rinse 3	C	D=30“	1(+6)	1(2)	-	NL -3	A=10“ R=5“	3 min	W
	Spin	Spin	-	-	-	-	-	-	-	5 min	H
	Slowdown		-	-	-	-	-	-	-	1 min	-
	Tumble		-	-	-	-	-	-	A=10“ R=5“	30 sec	W

❑ WASH PROGRAM 8: LIGHTLY SOILED - COLORED WASH - 40°C NO PREWASH

	Sequence		Supply		Inlet		Temp.	Level	Wash action	Time	R.P.M.
	Top	Front	Top	Front	Top	Front					
Step 1	Wash	Wash	B	B=30“	3-5	2-3	40°C	NL -3	A=10“ R=5“	10 min	W
	Drain	Drain	-	-	-	-	-	-	-	30 sec	D
Step 2	Rinse 1	Rinse 1	-	-	2-5-6	2	-	NH -3	A=10“ R=5“	2 min	W
	Spin	Spin	-	-	-	-	-	-	-	1 min	L
Step 3	Rinse 2	Rinse 2	-	-	2-5-6	2	-	NH -3	A=10“ R=5“	2 min	W
	Spin	Spin	-	-	-	-	-	-	-	1 min	L
Step 4	Final Rinse	Rinse 3	C	D=30“	1(+6)	1(2)	-	NL -3	A=10“ R=5“	3 min	W
	Spin	Spin	-	-	-	-	-	-	-	4 min	H
	Slowdown		-	-	-	-	-	-	-	1 min	-
	Tumble		-	-	-	-	-	-	A=10“ R=5“	30 sec	W

❑ WASH PROGRAM 9: BADLY SOILED – COOLDOWN - COLORED - 90°C

	Sequence		Supply		Inlet		Temp.	Level	Wash action	Time	R.P.M.
	Top	Front	Top	Front	Top	Front					
Step 1	Wash 1	Wash 1	B	A=30“	3-4-5	2-3	90°C	NL	A=12“ R=3“	10 min	W
	Spin	Spin	-	-	-	-	-	-	-	1 min	L
Step 2	Wash 2	Wash 2	B	B=30“	3-4-5	2-3	90°C	NL	A=12“ R=3“	10 min	W
	No Drain	No Drain	-	-	-	-	-	-	-	-	-
Step 3	Cooldown	Cooldown	-	-	6	2	45°C	-	A=12“ R=3“	15 min	W
	Spin	Spin	-	-	-	-	-	-	-	1 min	L
Step 4	Rinse 1	Rinse 1	-	-	2-5-6	2	-	NH	A=12“ R=3“	2 min	W
	Spin	Spin	-	-	-	-	-	-	-	1 min	L
Step 5	Final Rinse	Rinse 2	C	D=30“	1(+6)	1(2)	-	NL	A=12“ R=3“	3 min	W
	Spin	Spin	-	-	-	-	-	-	-	5 min	H
	Slowdown		-	-	-	-	-	-	-	1 min	-
	Tumble		-	-	-	-	-	-	A=12“ R=3“	30 sec	W

➔ Working clothes, industrial clothing POLYESTER / COTON

❑ WASH PROGRAM 10: BADLY SOILED – COOLDOWN - WHITE - 90°C

	Sequence		Supply		Inlet		Temp.	Level	Wash action	Time	R.P.M.
	Top	Front	Top	Front	Top	Front					
Step 1	Prewash	Wash	A	A=30“	2-3	2-3	35°C	NL	A=12“ R=3“	6 min	W
	Spin	Spin	-	-	-	-	-	-	-	1 min	L
Step 2	Wash	Wash	B	B=30“	3-4-5	2-3	90°C	NL	A=12“ R=3“	15 min	W
	No Drain	No Drain	-	-	-	-	-	-	-	-	-
Step 3	Cooldown	Cooldown	-	-	6	2	45°C	-	A=12“ R=3“	15 min	W
	Spin	Spin	-	-	-	-	-	-	-	1 min	L
Step 4	Rinse 1	Rinse 1	-	-	2-5-6	2	-	NH	A=12“ R=3“	2 min	W
	Spin	Spin	-	-	-	-	-	-	-	1 min	L
Step 5	Final Rinse	Rinse 2	C	D=30“	1(+6)	1(2)	-	NL	A=12“ R=3“	3 min	W
	Spin	Spin	-	-	-	-	-	-	-	5 min	H
	Slowdown		-	-	-	-	-	-	-	1 min	-
	Tumble		-	-	-	-	-	-	A=12“ R=3“	30 sec	W

➔ Butcher clothes, Working clothes White POLYESTER / COTON

❑ Oxygen (Peroxy) Bleach : Step 2 ❑ Chlorine (Javel) Bleach : Step 4

❑ WASH PROGRAM 11: BADLY SOILED – COOLDOWN - 60°C

	Sequence		Supply		Inlet		Temp.	Level	Wash action	Time	R.P.M.
	Top	Front	Top	Front	Top	Front					
Step 1	Prewash	Wash	A	A=30“	2-3	2-3	35°C	NL	A=12“ R=3“	7 min	W
	Spin	Spin	-	-	-	-	-	-	-	1 min	L
Step 2	Wash	Wash	B	B=30“	3-4-5	2-3	60°C	NL	A=12“ R=3“	12 min	W
	No Drain	No Drain	-	-	-	-	-	-	-	-	-
Step 3	Cooldown	Cooldown	-	-	6	2	45°C	-	A=12“ R=3“	7 min	W
	Spin	Spin	-	-	-	-	-	-	-	1 min	L
Step 4	Rinse 1	Rinse 1	-	-	2-5-6	2	-	NH	A=12“ R=3“	2 min	W
	Spin	Spin	-	-	-	-	-	-	-	1 min	L
Step 5	Final Rinse	Rinse 2	C	D=30“	1(+6)	1(2)	-	NL	A=12“ R=3“	3 min	W
	Spin	Spin	-	-	-	-	-	-	-	5 min	H
	Slowdown		-	-	-	-	-	-	-	1 min	-
	Tumble		-	-	-	-	-	-	A=12“ R=3“	30 sec	W

➔ Lightly Soiled Dust-coat, Working clothes 60°C POLYESTER / COTON

❑ WASH PROGRAM 12: WHITE CHLORINE BLEACH – 90°C (JAVEL BLEACH)

	Sequence		Supply		Inlet		Temp.	Level	Wash action	Time	R.P.M.
	Top	Front	Top	Front	Top	Front					
Step 1	Prewash 1	Wash	A	A=30“	2-3	2-3	35°C	NL	A=12“ R=3“	5 min	W
	No Drain	No Drain	-	-	-	-	-	-	-	-	-
Step 2	Prewash 2	Wash	-	-	2-3	2-3	55°C	NL +3	A=12“ R=3“	5 min	W
	Spin	Spin	-	-	-	-	-	-	-	1 min	L
Step 3	Wash	Wash	B	B=30“	3-4-5	2-3	90°C	NL	A=12“ R=3“	12 min	W
	Drain	Drain	-	-	-	-	-	-	-	30 sec	D
Step 4	Rinse 1	Rinse 1	-	-	2-5-6	2	-	NH	A=12“ R=3“	2 min	W
	Spin	Spin	-	-	-	-	-	-	-	1 min	L
Step 5	Rinse 2	Rinse 2	B	C=30“	2-5-6	2	-	NL	A=12“ R=3“	8 min	W
	Spin	Spin	-	-	-	-	-	-	-	1 min	L
Step 6	Rinse 3	Rinse 3	-	-	2-5-6	2	-	NH	A=12“ R=3“	2 min	W
	Spin	Spin	-	-	-	-	-	-	-	1 min	L
Step 7	Final Rinse	Rinse 4	C	D=30“	1(+6)	1(2)	-	NL	A=12“ R=3“	3 min	W
	Spin	Spin	-	-	-	-	-	-	-	5 min	H
	Slowdown		-	-	-	-	-	-	-	1 min	-
	Tumble		-	-	-	-	-	-	A=12“ R=3“	30 sec	W

➔ Cooks Clothes, white and cotton, badly soiled table clothes

❑ WASH PROGRAM 13: WHITE OXYGEN BLEACH – 90°C (PEROXY BLEACH)

	Sequence		Supply		Inlet		Temp.	Level	Wash action	Time	R.P.M.
	Top	Front	Top	Front	Top	Front					
Step 1	Prewash 1	Wash	A	A=30“	2-3	2-3	35°C	NL	A=12“ R=3“	5 min	W
	No Drain	No Drain	-	-	-	-	-	-	-	-	-
Step 2	Prewash 2	Wash	-	-	2-3	2-3	55°C	NL +3	A=12“ R=3“	5 min	W
	Spin	Spin	-	-	-	-	-	-	-	1 min	L
Step 3	Wash	Wash	B	B,C=30“	3-4-5	2-3	90°C	NL	A=12“ R=3“	15 min	W
	Drain	Drain	-	-	-	-	-	-	-	30 sec	D
Step 4	Rinse 1	Rinse 1	-	-	2-5-6	2	-	NH	A=12“ R=3“	2 min	W
	Spin	Spin	-	-	-	-	-	-	-	1 min	L
Step 5	Rinse 2	Rinse 2	-	-	2-5-6	2	-	NL	A=12“ R=3“	2 min	W
	Spin	Spin	-	-	-	-	-	-	-	1 min	L
Step 6	Rinse 3	Rinse 3	-	-	2-5-6	2	-	NH	A=12“ R=3“	2 min	W
	Spin	Spin	-	-	-	-	-	-	-	1 min	L
Step 7	Final Rinse	Rinse 4	C	D=30“	1(+6)	1(2)	-	NL	A=12“ R=3“	3 min	W
	Spin	Spin	-	-	-	-	-	-	-	5 min	H
	Slowdown		-	-	-	-	-	-	-	1 min	-
	Tumble		-	-	-	-	-	-	A=12“ R=3“	30 sec	W

➔ Cooks Clothes, white and cotton, badly soiled table clothes

❑ WASH PROGRAM 14: EXTRACTION - LOW SPEED

	Sequence		Supply		Inlet		Temp.	Level	Wash action	Time	R.P.M.
	Top	Front	Top	Front	Top	Front					
Step 1	Final Rinse	Rinse	C	D=30“	1(+6)	1(2)	-	NH	A=12“ R=3“	3 min	W
	Spin	Spin	-	-	-	-	-	-	-	5 min	L
	Slowdown		-	-	-	-	-	-	-	1 min	-
	Tumble		-	-	-	-	-	-	A=12“ R=3“	30 sec	W

❑ WASH PROGRAM 15: EXTRACTION - HIGH SPEED

	Sequence		Supply		Inlet		Temp.	Level	Wash action	Time	R.P.M.
	Top	Front	Top	Front	Top	Front					
Step 1	Final Rinse	Rinse	C	D=30“	1(+6)	1(2)	-	NH	A=12“ R=3“	3 min	W
	Spin	Spin	-	-	-	-	-	-	-	5 min	H
	Slowdown		-	-	-	-	-	-	-	1 min	-
	Tumble		-	-	-	-	-	-	A=12“ R=3“	30 sec	W

7.3. WASH PROGRAMS FOR X-MACHINES

- X & XS - type washing machines have a Spray Inlet in the Door glass.
- A Spray Sequence replaces the Second Rinse for the Standard Wash program 1, 2, 3, 4 and 6, 7 and 8.
- After the Spray Sequence, the Drain or Spin step is replaced by a No Drain step as the water has already been drained in the Spray Sequence.

8. TROUBLESHOOTING

8.1. DISPLAY MESSAGES

- Various messages may appear on the display at the start, during or at the end of a washing cycle.
- In some specific cases, an acoustic signal will alert the operator.
- When an error occurs the machine will automatically go over to a safe state. With the diagnostic program you can determine the problem. This program will test the individual functions of the washing machine one by one.

8.2. FAULT MESSAGES

- If a failure occurs the computer will display a diagnostic error message.
- The program number and step at which the interruption has occurred are displayed.
- The fault message itself contains a number and a corresponding text label by which it's easy to find the related information in the manual.
- If **Unload !** is displayed, the door can be opened.

PrXX StYY	**Unload !**
EZZZ: Fault message	

XX	: the program number
YY	: the program step number
Unload !	: you can open the door if **Unload !** is displayed
EZZZ	: the number of the occurred error
Fault message	: the text label of the error message

8.3. HOW TO HANDLE FAULT MESSAGES

⚠ **ATTENTION !!!**
CHECK IN THE MANUAL FOR WHAT PROBLEM THE ERROR MESSAGE CORRESPONDS TO.
ASK THE ASSISTANCE OF AN EXPERIENCED TECHNICIEN TO SOLVE THE PROBLEM.
ALL THE SAFETY PRECAUTIONS MUST BE FOLLOWED BEFORE EACH INTERVENTION.

- You can overrule and erase fault messages by:

☞ pressing the **STOP** or **ENTER** button (key switch in program mode)

☞ switching the power off/on

☞ opening the door (fault 4 and 41)

- For safety reasons the door will not be unlocked if :
  - there is still water in the drum
  - the water temperature is above 55°C
  - the drum is still turning (a safety time will be respected until the drum comes to a standstill)
  - there is a problem with the door lock system

- Each time at the end of the cycle, the Full Control Wash computer will fulfil a safety test sequence.
- If at the end of the cycle the safety conditions are not fulfilled, the messages **TOO HOT** or **WATER IN CAGE** will be displayed.

TOO HOT
XX °C

WATER IN CAGE
XX °C Level YY

- If the problem disappears (the water has dropped below the safety level for spin or the water temperature has dropped below 55°C) the Error message **TOO HOT** or **WATER IN CAGE** will disappear automatically.

⚠ **ATTENTION !!!**
IT'S UP TO THE OPERATOR TO TAKE THE NECESSARY PRECAUTIONS IF THE DRAIN VALVE IS NOT FUNCTIONAL AND IF THERE IS STILL HOT WATER IN THE TUB AT THE END OF THE WASH CYCLE.
ON THE DISPLAY THE ACTUAL WATER TEMPERATURE AND LEVEL WILL BE DISPLAYED.
WAIT UNTIL THE WATER IS DRAINED AND UNTIL THE WATER HAS COOLED BEFORE ALL INTERVENTIONS AS HOT WATER CAN CAUSE SEVERE BURNS.
CARE MUST BE TAKEN THAT NOBODY GETS BURNED DUE TO HOT WATER.

⚠ **ATTENTION !!!**
THE ERROR MESSAGE TOO HOT CAN ALSO APPEAR AT THE END OF A CYCLE EVEN IF NO FAILURE HAS OCCURED
AS AN EXAMPLE, SUPOSE A WASH PROGRAM WITH A HOT WASH.
AFTER THIS HOT WASH SEQUENCE, NO SEQUENCE WITH A LOW WATER TEMPERATURE HAS BEEN PROGRAMMED.
AT THE END OF SUCH A WASH CYCLE, THE TEMPERATURE IN THE TUB WILL STAY HIGH EVEN IF THERE IS NO WATER IN THE TUB.
AS A RESULT THE FULL CONTROL WASH COMPUTER WILL DECIDE THAT IT'S NOT SAFE TO OPEN THE DOOR AS THE MEASURED TEMPERATURE INSIDE THE TUB IS TOO HIGH.
WITHOUT INSERTING COLD WATER INSIDE THE TUB, IT CAN TAKE A LONG TIME BEFORE THE TEMPERATURE DROPS TO AN ACCEPTABLE SAFE LEVEL.
ONCE THE TEMPERATURE IN THE DRUM HAS DROPPED SUFFICIENTLY, THE FAILURE MESSAGE WILL DISAPEAR AND THE DOOR WILL BE UNLOCKED AUTOMATICALLY.

DEPENDING THE FAILURE TYPE THE FULL CONTROL COMPUTER WILL START A SPECIFIC PROCEDURE :

❑ **WHEN SAFETY IS INVOLVED**

- Full stop + tumble : the program is stopped but will run the tumble sequence
- Full stop + safety time : the program is stopped and a safety time is started
- Don't start : the program will not be started as long as the safety conditions are not fulfilled

❑ **WHEN SAFETY IS NOT INVOLVED**

- Full stop + request for continue : a request to **Continue ?** the program is displayed
- Skip + continue : the actual cycle step is skipped and the program continues with the next step
- Continue : the program continues

SPECIAL CASES :

- For **E11:Fill Time failure** and **E14:Heating time failure** after overruling and erasing the failure message, you can restart or stop the sequence, as **Continue ?** will be displayed.
  Possible cause : - water supply inlets closed
  - decreasing capacity of the heating elements

- For **E24:Defective Level sensor**, **E25:Defective Temperature sensor and E35:Wrong software version** the Failure message can **only** be erased by switching the power off and back on.

- Fault **31:Initialisation fault inverter** and **32:Verification fault inverter** can be erased by switching off the power. But as Fault 31 and 32 indicates that the frequency inverter is not loaded with the correct parameter settings, the washing machine can be damaged when the inverter is functioning with the wrong settings.
  Do not use the washing machine before a technician has inspected the problem.

- Fault **41:Service Due** will occur over and over again until you have reset the cycle counter.
  See Paragraph 8.5 how to reset the cycle counter.

- Fault 57**:Door Locked Continue >> START** will occur when the "Door Lock Switch" stays locked when opening the outer door on a MB90-140-180.
  You can still unload the linen at the other compartments by overruling the error message by Pressing the START button.

RESET KEY :

- When you have overruled an error message and opened the door, **Reset Key** will be displayed.
- This message warns the operator that the Key Switch is still in Program mode.
- Before you can start a new program you have to turn the key switch back to Run mode.

! ! Reset Key ! !

☞ Turn the key switch to Run mode.

8.4. OVERVIEW

N°	Failure message	Failure	Action	Fault occurrence
E1	No Drain Co	Drain failure Cooldown	Full Stop + tumble	Draining sequence Cooldown
E2	No Drain	Drain failure	Full Stop + tumble	Draining sequence
E3	Tilt Fault	Out of balance : Before spin	Full stop + tumble	Start spin
E4	Imbalance	Out of balance : Normal spin	Skip + continue	After 10 x tilt
E5	Tilt High Sp	Out of balance : high spin	Full stop + safety time	>500 or 750 RPM
E6	Door Coil	Door switch failure	Full stop + safety time	Whole cycle
E7	Door Switch	Door solenoid switch failure	Full stop + safety time	Whole cycle
E8	Door Start	Door lock check at start failure	Don't start	At start up
E9	Door Unload	Door lock switch closed failure	Don't start	End cycle
E10	Bimetal/Spring	Bimetal/Spring	Continue	2 min 30 sec after start cycle
E11	No Fill	Fill failure	Full stop + request for Continue	While filling
E12	Overfill	Overfill failure	Full stop + tumble	While filling
E13	No Heating	Heating failure	Full stop + tumble	While heating
E14	Heat Time	Heating time failure	Full stop + request for Continue	While heating
E15	Too Hot	Too Hot	Full stop + tumble	While heating
E16	/			
E17	/			
E18	Thermic	TH overcurrent security	Full stop + safety time	Motor contactor ON
E19	M1 Security	M1 wash + low spin motor security	Full stop + safety time	Motor contactor ON
E20	M2 Security	M2 distribution + high spin motor security	Full stop + safety time	Motor contactor ON
E21	Overflow	Overflow failure	Full stop + tumble	Wash step
E22	Flush fault	Flush failure	Full stop + tumble	Flush step
E23	PCB temp	Defective PCB temperature sensor	Continue	Any time
E24	Level Sens	Defective level sensor	Continue + Don't start	Before start up
E25	Temp Sensor	Defective temperature sensor	Continue + Don't start	Before start up
E26	Mitsub code	Undefined frequency inverter error code	Full stop + tumble	Whole cycle
E27	Comm fault	Communication fault inverter	Full stop + safety time	Whole cycle
E28	THT time	THT Time out	Full stop + safety time	At spin sequence
E29	OV3 time	OV3 Time out	Full stop + safety time	At spin sequence
E30	Mits Alarm	Alarm frequency inverter	Full stop + safety time	Whole cycle
E31	Load Parr	Initialisation fault inverter	Don't start	At initialisation
E32	Verify Parr	Verification fault inverter	Don't start	At loading parameters
E33	Stall prev	Stall prevention function active	Continue	At spin sequence
E34	/			
E35	Wrong Softw	WRONG SOFTWARE VERSION	Don't start	New software version

E36	Termic Tumbl	Defective motor contactor	Fatal error : Full stop	At tumble sequence
E37	No Drain Sp	Drain failure at the Spray Sequence	Full stop + tumble	Spray Sequence
E38	No Recycle	The Tank with recycle water is empty	Warning at the End. Front Hopper Mach. only	Wash step
E39	Out of Soap	The Soap Supplies are running Out of Soap	For Info only	Wash step
E40	No Fill Rec	Fill failure due to an empty water recycle Tank	Full stop + Request for Continue Top Hopper Mach. only	Wash step
E41	Service Due	Service Due Warning	For Info only Open door = reset	End cycle
E42	Connection	No Network Connection	For Info only	Data Transfer Networking
E43	Voltage Par	Wrong Voltage Range Selection	Make correct selection	Configuration menu
E44	Model type	Wrong Inverter Model Type	Make correct selection	Configuration menu
E45	No Speed Sensor Signal	No Speed pulses when drum turns.	Continue + Warning	At spin sequence (F120 only)
E46	Brake Closed	Brake Stays Closed	Full stop + safety time	At spin sequence (F120 only)
E47	Brake Wear Out	Friction blocks brake are wear-out	Full stop + safety time	Any time (F120 only)
E48	Brake Open	Brake Stays Open	Continue + Warning	At spin sequence (F120 only)
E49	UnBalance Switch At Wash	Air suspension without compressed air	Full stop + safety time	Wash action (F120 only)
E50	No Second Acceleration Ramp	Missing wire bridge inverter / wrong inverter parameters	Continue	At spin sequence (F120 only)
E51	No Third Acceleration Ramp	Missing wire bridge inverter / wrong inverter parameters	Continue	At spin sequence (F120 only)
E52	Board Memory	PCB-EEPROM CRC failure	Don’t start	At Power Up
E53	Board Data	PCB-EEPROM Data out of range failure	Don’t start	At Power Up
E54	Lock Active	At standby door lock is locked nevertheless door is open	Don't start	At Standby
E55	Lock Start	After pressing Start door lock is locked nevertheless door is open	Don't start	At Start cycle
MCB40 (E52)	Inner Door	Inner Door handle not locked	Full stop + safety time	At wash speed (MB only)
MCB40 (E53)	Magnet Sensor 1	Safety Distance inner door exceeded.	Full stop + tumble. (Reset Service menu)	At wash speed (MB only)
MCB40 (E54)	Magnet Sensor 1	Safety Distance inner door exceeded.	After 2x softw tilt, Full stop + tumble.	At spin sequence (MB only)
MCB40 (E55)	Magnet Sensor 2	Safety Distance inner door exceeded.	Full stop + tumble. (Reset Service menu)	At wash speed (MB only)
MCB40 (E56)	Magnet Sensor 2	Safety Distance inner door exceeded.	Full stop + tumble. (Reset Service menu)	At spin sequence (MB only)

E57	Door Locked	Door Lock Switch stays closed when the outer door is open.	Don't Start	At locking sequence (MB90-140-180 only)
E80	Time Out Input16	On Hold Signal Failure Soap Dispensing System	Full stop + tumble.	Whole cycle
E81	No Reheat	Heating Failure	Full stop + tumble.	Wash Step (MB only)
E82	No Refill	Refill failure	Full stop + request for Continue	Wash Step (MB only)
E83	Cycle Fail	No successful wash cycle termination	Info that the wash cycle has to be repeated.	Abnormal Cycle Termination (MB only)
E84	No Store PC	Communication failure with PC	For Info only.	End cycle (MB only)
E85	RTC Low Batt	Real Time Clock, No Battery or battery low power	For Info only.	End cycle (MB only)
E86	No RTC Comm	Real Time Clock is not available	For Info only.	End cycle (MB only)
E150-E165	Memory Err	Memory Error	Full stop + safety time	Any time
E170-E199	Softw Err	Software Error	Full stop + safety time	Any time
E100-E140	Mits Err	Specific Mitsubishi Inverter Alarm	Full stop + safety time	Whole cycle

8.5. SERVICE MENU

In the Service menu you have some extra utilities:

- The Software Version Number.
- An overview of the 8 last failure messages.
- Statistics for 9 general error messages
- Pulley ratio
- An overview of the input states
- Switching On the Inverter for a technical intervention
- Reset Cycle Counter and Statistics Error Messages

❑ HOW TO GET INTO THE SERVICE MENU

The SERVICE menu can only be accessed when the machine is in standby (the power is switched on, but no program is started).

- **SELECT Process**_ _ is displayed.
- Turn the key switch to the program mode.
- The Main menu is now available.
- Press the **ARROW DOWN** button to select the SERVICE menu.

Main Menu
Service

- Press the **ENTER** button to make your selection.
- Now you will see the first menu item.
- By pressing the **ARROW DOWN** or **UP** button you can see the menu items one by one.

S:Software
Version 1.00

- The Software Version number.
- You can select the next menu item by pressing the **ARROW DOWN** button.

S:View Fault
Messages?

- If you don‘t want to see the Fault messages, press the **ARROW DOWN** button.
- If you want to see the Fault messages, press the **ENTER** button.

S:Fault N° 1 :
EXXX:YYYYYYYYYY

- There are 8 Fault Messages kept in EEPROM memory.
- Fault N° 1 : the last occurred error message.
  Fault N° 2 : the last –1 occurred error message.
  …
  Fault N° 8 : the last – 7 occurred error message.

- **E XXX** : The Error message number
- **YYYYYYYYYY** : The Error message name

- Press the **ARROW DOWN** button to see message by message and to leave the Error message menu.
- If no messages are displayed, this means that no Errors have occurred.

S:Erase Fault
Messages? No

- If you don‘t want to erase the Fault messages, press the **ARROW DOWN** button.
- Press the **YES** and **ENTER** button if you want to erase the Error messages.

S:View Fault
Statistics?

- If you don‘t want to see the Fault statistics, press the **ARROW DOWN** button.
- If you want to see the Fault statistics, press the **ENTER** button.
- The Fault Statistics are an accumulation of Errors messages that have appeared over a long period.
- The Statistics can be reset at the Service Menu, by a Reset of the Cycle counter.
- With this information the technician has an indication on which parts an intervention will be needed.

S:No Drain
0 x

The List with Statistics.

- No Drain : E1 + E2 + E37
- Door Switch : E6 + E7 + E8 + E9
- Bimetal / Spring : E10 + E56
- No Fill : E11 + E40
- No Heating : E13 + E14
- Thermic : E18 + E19 + E20 + E36
- Temp Sensor : E25
- Level Sensor : E24
- Mitsubishi Alarm : E26 + E27 + E28 + E29 + E30
- Loc k Active : E54 + E55

S:Output Power
Inverter : Off

- For washing machines with Frequency Inverter Controlled motor only.
- By this function it‘s possible to switch on the power for the inverter if a technical intervention is needed.
- By selecting YES, the power of the inverter is switched on.

⚠**ATTENTION !!!**
SPECIAL CARE HAS BEEN TAKEN AT THE INITIALISATION OF THE PARAMETERS OF THE MITSUBISHI FREQUENCY INVERTER.
THE MANUFACTURER IS NOT RESPONSIBLE FOR THE WRONG BEHAVIOR OF THE WASHING MACHINE IF THE OWNER HAS INSTALLED NEW PARAMETER SETTINGS IN THE INVERTER THAT DO NOT CORRESPOND WITH THE ORIGINAL SETTINGS AT THE FACTORY.

S:Pulley
Ratio : XX

▼

- XX is the Pulley Ratio.
- You can check if the motor pulley and the drum pulley have the correct size by calculating the pulley ratio.
- This value should be about the same as the displayed value.
- Press the **ARROW DOWN** button to select the next menu item.

S:View Input
States ?

▼

- If you don‘t want to see the Input States, press the **ARROW DOWN** button.
- If you want to see the Input States, press the **ENTER** button.

S:Input 1 Off

▼

- Input 1 : the State that corresponds with Input 1.
  Input 2 : the State that corresponds with Input 2.
  …
  Input 16 : the State that corresponds with Input 16.

- The exact function of the inputs can be found on the electrical drawing of the Full Control Wash Machine.
- If the Input state is Off, the Input signal is low.
- If the Input state is On, the Input signal is high.

- Press the **ARROW DOWN** button to see message by message and to leave the Input state menu.

S:Reset Cycle
Counter : No

▼

- To avoid that No maintenance will be fulfilled when the machine has reached the number of cycles that corresponds with the “Service Interval _ _ _” number at the Initialisation menu, a warning will be generated over and over again at the end of each cycle until the Cycle Counter at the Service menu has been reset.
- Also the Statistics for Error messages will be Reset by resetting the Cycle counter.
- If you don‘t want to reset the Cycle Counter, press the **ARROW DOWN** button.
- Press the **YES** and **ENTER** button if you want to reset the **Cycle Counter**.

S:Reset Magn.
Sensor Err: No

▼

- **ONLY FOR MB WASHING MACHINES.**
- Error messages 53, 55, 56 can only be reset by selecting **Yes** in this menu item.
- If you don‘t want to reset the Magnetic Sensor Error Message, press the **ARROW DOWN** button.
- Press the **YES** and **ENTER** button if you want to reset the Magnetic Sensor Error Message.

⚠ **Attention !**

- **Consult your local Dealer or the Manufacturer for inspection of the inner doors first before you reset the Error message.**

S: Service
Menu Exit

↵

- Press the **ENTER** button if you want to leave the SERVICE Menu.

⚠ **Attention !**

With the ARROW UP button you can go back to a previous menu item.

8.6. DIAGNOSTIC PROGRAM

The purpose of the diagnostic program is to test the wash machine functions one by one.

❑ HOW TO GET INTO THE DIAGNOSTIC MENU

The Diagnostic menu can only be accessed when the machine is in standby (the power is switched on, but no program is started).

1. **Select Process**_ _ is displayed.
   Turn the key switch to the program mode.
   The Main menu is now available.
   Press the **ARROW DOWN** button to select the Diagnostic menu.

Main Menu
Diagnostic

- Press the **ENTER** button to make your selection.

D:Diagnostic
Program : No

▼

Pr : Test
Press Start

▼

- If you don‘t want to start a diagnostic program, press the **ARROW DOWN** button.
- If you want to start the diagnostic program, press the **ENTER** button.

- Press **START** if you want to start the diagnostic program.
- Press **STOP** if you Do NOT want to start the diagnostic program.

D:Diagnostic
Menu Exit

↵

- Press the **ENTER** button if you want to leave the Diagnostic Menu.

⚠ **Attention !**
With the ARROW UP button you can go back to a previous menu item.

❑ TEST SEQUENCE

- **Display test and door lock test**
- **Sensor test**
- **Motor test**
- **Water fill, heating and drain test**
- **BASIC Diagnostic Wash program**

❑ Diagnostic Test Sequence for Machines with Top Soap Hopper.

- **Test (R) : For Rigid Mounted washing machines.**
- **Test (F) : For Free Standing washing machines.**

Test (R)	Test (F)	Info	Explanation
1	**1**	Black display followed by a Text display.	➔ Door lock test (locks and unlocks 5 x the door) ➔ Display test
*******	*******	None	➔ Sensor test (all wash machine sensors are tested)
3	**3**	Reverse	➔ Wash speed (inverse direction high spin)
4	**4**	Stop	⇒ Standstill motor
5	**5**	Forward	➔ Wash speed (same direction high spin)
6	**6**	Distribution	➔ Distribution speed (same direction high spin)
7	**7**	Low spin	➔ Low spin speed (same direction high spin)
	8	High spin	➔ High spin speed (the drum is turning away from the soap box)
8	**9**	Stop	➔ Free run or controlled deceleration
20	**20**	I1	➔ The machine takes water by inlet 1
21	**21**	Drain 1	➔ The water is drained by drain valve 1
22	**22**	I2	➔ The machine takes water by inlet 2 until the safety level for heating is reached ➔ Heating activated (only if **Wait temp = on**)
23	**23**	Drain 1 (2)*	➔ The water is drained by drain valve 1
24	**24**	I3	➔ The machine takes water by inlet 3
25	**25**	Drain 1	➔ The water is drained by drain valve 1
26	**26**	I4	➔ The machine takes water by inlet 4
27	**27**	Drain 1	➔ The water is drained by drain valve 1
28	**28**	I5	➔ The machine takes water by inlet 5
29	**29**	Drain 1	➔ The water is drained by drain valve 1
32	**30**	I6	➔ The machine takes water by inlet 6
31	**31**	Drain 1	➔ The water is drained by drain valve 1
50	**50**	Tumble	⇒ The tumble sequence
		Unload	⇒ End of the Diagnostic Cycle

Note : * The second drain valve will be opened if a second drain valve has been selected in the Configuration menu.

*** No number 2 is displayed at the sensor test as this takes only a fraction of a second.

❑ **Diagnostic Test Sequence for Machines with Front Soap Hopper.**

- **Test (2) : For washing machines with 2 Main Water Supplies.**
- **Test (3) : For washing machines with 3 Main Water Supplies.**

Test (2)	Test (3)	Info	Explanation
1	**1**	Black display followed by a Text display.	➔ Door lock test (locks and unlocks 5 x the door) ➔ Display test (**)
***	***	None	➔ Sensor test (all wash machine sensors are tested)
3	**3**	Reverse	➔ Wash speed (inverse direction high spin)
4	**4**	Stop	⇒ Standstill motor
5	**5**	Forward	➔ Wash speed (same direction high spin)
6	**6**	Distribute	➔ Distribution speed (same direction high spin)
7	**7**	Low Extract	➔ Low spin speed (same direction high spin)
8	**8**	High Extract	➔ High spin speed (the drum is turning away from the soap box)
9	**9**	Stop	➔ Free run or controlled deceleration
	20	I1	➔ The machine takes water by inlet 1
	21	Drain 1	➔ The water is drained by drain valve 1
20	**22**	I2	➔ The machine takes water by inlet 2 until the safety level for heating is reached ➔ Heating activated (only if **Wait temp = on**)
21	**23**	Drain 1 (2)*	➔ The water is drained by drain valve 1
22	**24**	I3	➔ The machine takes water by inlet 3
24	**26**	A	➔ Supply 1 is activated for 30“
26	**28**	B	➔ Supply 2 is activated for 30“
28	**30**	C	➔ Supply 3 is activated for 30“
30	**32**	D	➔ Supply 4 is activated for 30“
32	**34**	E	➔ Supply 5 is activated for 30“
50	**50**	Tumble	⇒ The tumble sequence
		Unload	⇒ End of the Diagnostic Cycle

Note : * The second drain valve will be opened if the second drain valve has been selected in the Configuration menu.

** For X/XF and MB Door lock test only 1x (X/XF22 5x)

***No number 2 is displayed at the sensor test as this takes only a fraction of a second.

Remark !

If **++ ++** is displayed at the upper right corner of the display at the motor test sequence, then you can Advance (Press **START**) the test Sequence.

❑ BASIC Diagnostic Wash program

	Sequence		Supply		Inlet		Temp.	Level	Wash action	Time	R.P.M.
	Top	Front	Top	Front	Top	Front					
Step 1	Wash	Wash	B	-	3-4-5	2-3	40°C	NL	A=12“ R=3“	6 min	W
	Drain	Drain	-	-	-	-	-	-	-	30 sec	D
Step 2	Rinse 1	Rinse 1	-	-	2-5-6	2	-	NH	A=12“ R=3“	1.5 min	W
	Spin	Spin	-	-	-	-	-	-	-	1 min	L
Step 3	Final Rinse	Rinse 3	C	-	1(+6)	1(2)	-	NL	A=12“ R=3“	2 min	W
	Spin	Spin	-	-	-	-	-	-	-	4.5 min	H
	Slowdown		-	-	-	-	-	-	-	1 min	-
	Tumble		-	-	-	-	-	-	A=12“ R=3“	30 sec	W

Error messages :

- If the computer detects some problem during the Diagnostic Help Program, a diagnostic error message is generated.
- Check also the Error Log List in the Service-menu.
- Check the error handling and explanation of the error messages.

8.7. PROBLEM CHECK LIST

Problem	Cause	Solving the problem
When the power is switched on : the display is not illuminated Remark : The display must always light up when the power connector is connected to the electronic board (EPROM with software must be implemented)	• no external power • the emergency button is activated • the power connector is not connected on the board • the power connector is inverse connected • the fuse on the electronic board has burned • disconnect the input connector • check if the EPROM that contains the software is implemented	• Switch on the external power supply • verify the external power to the machine • deactivate the emergency button • connect the power connector • check the wiring and connect the connector as it must be • if the transformer is burned replace the electronic board Check the wiring and the voltage at the power Connector If the transformer is still OK change the Fuse • if the display is lighting up: verify if the input signals or the +16Vdc Supply Signal are touching the cabinet • if there is no EPROM implemented on the electronic board, put the right EPROM with software into the socket
The display is illuminated, but it's difficult to read the text on the display.	• the brightness is not Ok	• Change the value for Brightness in the Configuration Menu until you get a bright display.
The machine is not starting up	• the key switch stands in "Program mode"	• set the Key switch to "Run mode"
The machine is not responding on pressing the keyboard buttons	• the key switch is not functional • the "START" button is not functional (the key switch stands in Program mode) • no button is functional and the key switch is in the right position • there is no beep signal when the buttons are pressed	• check if the input connector "A" is well connected and check the wiring between the input connector and the key-switch • set the Key switch to "Run mode" • check if the connector "K" of the keyboard is well connected • check if the connector "K" of the keyboard is well connected
The machine is not behaving as expected	• if the wrong machine type is selected the wrong outputs will be activated	• check if the right machine type is selected in the Configuration Menu.
A program is started, but the outputs are not activated	• check if connector "R" and "Q" are connected • check if connector "R" and "Q" are not inverted	• connect the connector at the correct position • Pin "Q10" must be supplied with 220Vac when the door is closed
Wait is displayed and a counter is counting down	• this is a wait state caused by a power interruption or a safety sequence at the end of the process	• wait until the counter has reached 0 • do not switch off/on the power again as you will restart the counter
Unload is displayed and the Door is Open	• Check if the "Door Switch" is still closed	• If the "Door Switch" is broken, replace the Door Switch"
Wrong water level (the water level sensor must not be calibrated)	• check if the programmed water levels are the correct ones • check if the right machine type is selected in the Configuration Menu • you have changed the machine type, but the standard water levels do not change	• set the right water levels • select the right machine type in the Configuration Menu • the standard water levels can only be reinitialised by programming new values or by loading the Standard Wash programs again.
The drum is not turning (No error message will be generated)	• Check if the belt is broken • Check the applied motor voltage • Check if the motor is still functional • Check the Inverter	• Check the tension of the belt or replace the belt • repair the motor power supply circuit • change the motor if needed • send a request for more info to the manufacturer

8.8. EXPLANATION ERROR MESSAGES

FAILURE 1 : DRAIN FAILURE COOLDOWN SEQUENCE

Failure 1 occurs when the electronic timer detects that the water is not drained after 3 minutes in a Cooldown Sequence. The failure message is displayed at the end of the cycle.

DIAGNOSE:

1. Check the drain tube of the washing machine	If the drain tube is blocked: repair the drain tube
2. Check the drain valve	If the drain valve is defective: replace the drain valve
3.Check the wiring: verify if the drain valve is switched Off The drain valve is normal open.	If the wiring is damaged: repair the wiring

FAILURE 2: DRAIN FAILURE

Failure 2 occurs when the electronic timer detects that the water is not drained after 3 minutes in a Drain or Spin Sequence. The failure message is displayed at the end of the cycle.

DIAGNOSE:

1. Check the drain tube of the washing machine	If the drain tube is blocked: repair the drain tube
2. Check the drain valve	If the drain valve is defective: replace the drain valve
3. Check the wiring: verify if the drain valve is Switched OFF The drain valve is normal open.	If the wiring is damaged: repair the wiring

FAILURE 3 : OUT OF BALANCE BEFORE SPIN

Failure 3 occurs when the out of balance sensor is activated before the spin sequence has started.

Result: the machine will not spin

DIAGNOSE:

1. Check if the out of balance switch is broken (Make sure shipping braces are removed)	If the out of balance switch is broken: replace the out of balance switch
2. Check the position of the out of balance switch	If the out of balance switch is not correctly mounted: install the out of balance switch properly
3. Check the wiring, the contact of the out of balance switch is normally closed Check connector pins for loose connections	If there is no continuity: repair the wiring

FAILURE 4 : OUT OF BALANCE NORMAL SPIN

Out of balance at normal Spin will occur when a wash machine is badly loaded.
The machine will try up to 10 times to redistribute the laundry in the drum before the spin step is skipped.
This function will protect the machine against overload and assures the normal lifetime of the washing machine.

DIAGNOSE:

1. Check the position of the out of balance switch	If the out of balance switch is not correctly mounted, install the out of balance switch properly
2. If this failure occurs often	Use a fully loaded drum. A completely filled drum produces less unbalance than a drum that is only filled for 1/3
3. Check the wiring if there is no bad connection. The out of balance sensor is a NC contact	If there is a bad connection: repair the wiring

FAILURE 5 : OUT OF BALANCE HIGH SPIN

Failure 5 occurs when the out of balance sensor is activated at high spin. This failure indicates that there will be probably a mechanical defect.

DIAGNOSE:

1. Check the position of the out of balance switch	If the out of balance switch is not correctly mounted, install the out of balance switch properly
2.Check the springs and the other mechanical parts that fix the drum.	If you see a broken mechanical part: replace the broken part
3. Check the wiring if there is a bad connection	If there is a bad connection: repair the wiring
4. Check that the washing machine is installed correctly and stable.	Adjust the supports at the bottom of the washing machine.

FAILURE 6 : DOOR SWITCH FAILURE

For safety reasons : while a process is running the door lock system is scanned all the time.

If the controller detects that the "DOOR SWITCH" is not closed then the machine will immediately stop all its functions. The door will stay locked.

DIAGNOSE:

1. Check the well functioning of the "DOOR SWITCH". The "DOOR SWITCH" is a NO normal open contact.	If the "DOOR SWITCH" is broken or malfunctions replace the door switch
2. Check the continuity of the wiring	If the wiring is not continuous: repair the wiring
3. Check the functioning of RL20	If RL20 is not functioning replace the electronic board.

FAILURE 7: DOOR SOLENOID SWITCH FAILURE

For safety reasons: the door locked system is scanned all the time.
If the machine detect that the "DOOR SOLENOID SWITCH" is not closed then the machine will immediately stop all its functions. The door will stay locked.

DIAGNOSE:

1. Check the functioning of the "DOOR SOLENOID SWITCH". The "DOOR SOLENOID SWITCH" is a NO open contact.	If the „DOOR SOLENOID SWITCH" is broken or functions not 100%: replace the door lock system
2. Check the door lock coil	If the door lock coil doesn't function: replace the door lock coil
3. Check the mechanical functionality of the door lock.	If the door lock is not functioning mechanically: replace the door lock system
4. Check the continuity of the wiring	If the wiring is not continuous: repair the wiring

FAILURE 8: DOOR LOCK CHECK AT START FAILURE

The washing machine will not start a new process when the door is not locked after pressing the **START** button.
The Message **DOOR !** is displayed.
When you open the door : the fault message is erased.

<u>Exeption :</u>

If the „DOOR SWITCH" is opened again just before the cycle has started, (the „DOOR SOLENOID SWITCH" is still closed) Fault message 8 will also be generated.

DIAGNOSE:

1. Check if the input connector A is connected	If the input connector A is not connected : connect connector A
2. Check the functioning of the "DOOR SOLENOID SWITCH"	If the door switch is broken or functions not 100% : replace the door lock system
3. Check the door lock coil	If the door lock coil doesn't function : replace the door lock coil
4. Check the mechanical functionality of the door lock	If the door lock is not functioning mechanically : replace the door lock system
5. Check the continuity of the wiring	If the wiring is not continuous : repair the wiring
6. Check the output relay that powers the door lock coil	If the relay is broken, replace the electronic board
7. Check the output relay that powers the door lock coil	If the relay is not broken, but doesn't receive a signal from the electronic board, replace the electronic board
8. Check the functioning of the „DOOR SWITCH"	If the door switch is broken or functions not 100% : replace the door lock system
9. Check the well functioning of RL20	If RL20 is not well functioning replace the electronic board.

FAILURE 9: DOOR SOLENOID SWITCH CLOSED FAILURE

If within 30 sec the "DOOR SOLENOID SWITCH" doesn't change state at the end of the cycle: Message 9 will be displayed. At the end of the cycle the Door Lock coil is switched off and the "DOOR SOLENOID SWITCH" must open it's contact. If the contact is broken and stay closed forever, the software will give a message to inform the user that the door lock system isn't safe anymore.

DIAGNOSE:

1. Check the functioning of the "DOOR SOLENOID SWITCH"	If the door switch is broken or functions not 100%: replace the door lock system
2. Check the door lock coil	If the door lock coil doesn't function: replace the door lock coil
3. Check the mechanical functionality of the door lock	If the door lock is not functioning mechanically: replace the door lock system
4. Check the continuity of the wiring	If the wiring is not continuous: repair the wiring
5. Check the output relay that powers the door lock coil	If the relay stays closed and the relay is broken, replace the electronic board
6. Check the output relay that powers the door lock coil.	If the relay is not broken, but receives a not allowed signal from the electronic board, replace the electronic board

FAILURE 10: BIMETAL/SPRING

The bimetal/Spring is an extra security that the door can not be opened immediately when the power is switched off. To verify that the bimetal/Spring is not defective, the bimetal/Spring is checked each cycle. If the bimetal/Spring is defective : at the end of the program, failure message 10 is displayed.

DIAGNOSE:

1. Check the bimetal/Spring	If the bimetal/Spring is defective: replace the bimetal/Spring
2. Check the mechanical functionality of the door lock.	If the door lock is not functioning mechanically: replace the door lock system
3. Check the continuity of the wiring	If the wiring is not continuous: repair the wiring

FAILURE 11: FILL FAILURE

Failure 11 occurs when the water level has not reached its target level in x minutes.

x = Max fill time, a value that can be programmed at the Initialisation Menu.

⚠ **ATTENTION !!!** : The rubber hose must be fixed with a fastener on the electronic water level Sensor.

DIAGNOSE:

1. Check if the programmed Max fill time in the Initialisation menu is acceptable.	If the water flow is very slow increase the value for the Max fill time. The default value is 10 minutes.
2. Check if the external water valves are open	If the water valves are closed: open the water inlet valves
3. Check if the water inlet valves are not blocked by dirt	If the water inlet valves are blocked by dirt: clean the water inlet valves or replace the water inlet valves
4. Check the coil of the water inlet valves	If the coil of the water inlet valve is open: replace the coil or the complete inlet valve
5. Check the drain valve	If the drain valve is defective: replace the drain valve
6. Check if the rubber hose (for measuring the water level) is well mounted on the electronic level sensor and on the drain valve	If the hose is not well mounted: install the rubber hose properly
7. Check if the hose on the electronic sensor is air tight.	If the air hose is not air tight: replace the air tube. With a fastener, you can make the hose air tight at the level sensor.
8. Check if the hose doesn't contain water (siphon)	If the air tube contains water: remove the water and fix the hose so that it doesn't work as a siphon
9. Check the continuity of the wiring	If the wiring is not continuous: repair the wiring
10. Check the output relay that powers inlet valves and the drain valve	If the relay receives a command signal but is not closed, replace the electronic board
11. Check the output relay that powers inlet valves and the drain valve	If the relay does not receives a command signal, replace the electronic board

FAILURE 12: OVERFILL FAILURE

If the target water level is X units above the target level then failure message 12 will be displayed.
The fault message will not be generated when the user is advancing from a sequence with a high water level to a sequence with a low water level.

X= "Max. level Overfill", a value that can be programmed at the Initialisation menu.

DIAGNOSE:

1. Check if the water inlet valves are broken	If the water inlet valves are broken: clean or replace the water inlet valve diaphrams
2. Check if the water pressure is not to high	Lower the water pressure
3. Check the output relay that powers the inlet valve	If the relay stays closed and the relay is broken, replace the electronic board
4. Check the output relay that powers the inlet valve	If the relay is not broken, but receives a not allowed signal from the electronic board, replace the electronic board

In Case of Steam Heating :

If the steam has not enough heating power (too low temperature), the machine will be filled with too much water at the heating part. This will result in an increased water, energy and supply consumption.

It's strongly recommended that the heating installation works with enough heating power.

A simple solution can also be to reduce the programmed target water level. As less steam will be required, the normal water level should be reached. In the initialisation menu it is also possible to adjust the alarm level to avoid the error message. (= not recommended)

FAILURE 13: HEATING FAILURE

If the heater elements are not functioning : message 13 will be displayed.
The message is generated when the temperature is not raising with 3°C in 10 minutes time.

DIAGNOSE:

1. Check if the heating contactor is activated	If the heating contactor is not activated: repair the wiring or replace the contactor
2. Check if the heating elements are heating	If the heating elements are not heating: Repair the wiring or replace the defective heater elements
3. Check if the temperature sensor is functioning	If the temperature sensor is defective: replace the temperature sensor
4. Check the output relay that powers the heating contactor	If the relay is broken, replace the electronic board
5. Check the output relay that powers the heating contactor	If the relay is not broken, but doesn't receive a signal from the electronic board, replace the electronic board

FAILURE 14: HEATING TIME FAILURE

When after x minutes the target temperature is not reached (for a machine set as wait for heat):
Message 14 will be displayed.

x = the programmed Max heating time in the Intialization Menu.

DIAGNOSE:

1. Check if the programmed Max Heating time in the Initialisation menu is acceptable.	If the machine has a small heating capacity, increase the value of the Max heating time. The default is 60'. (For machines with big heating capacity)
2. Check if the heating resistors are heating	If the heating resistors are not heating: Repair the wiring or replace the defective heater elements
3. Check the water temperature	If the hot water supply temperature is to low: increase the temperature of the hot water
4. Check if the temperature sensor is functioning	If the temperature sensor is defective : replace the temperature sensor

FAILURE 15: TOO HOT

When the water temperature is 15°C above the target temperature : message 15 will be displayed.

For evaluation of the problem, you can follow the water temperature of the bath on the display of the washing machine by pressing the Service Button on the keypad.

DIAGNOSE:

1. Check if correct water inlet valves have been programmed. If only hot water inlet valves have been programmed, and if the hot water supply has a temperature value above the programmed wash sequence value then the temperature of the wash bath will be too high.	Choose the correct water inlet valves for the wash sequence when you create or adjust the parameters of the wash program. Don't program only hot water inlet valves but also cold ones !
2. Check if the correct water inlet valves are Functional. If the cold water inlet valves are not functional or if the main cold water supply is not available and only hot water inlet valves are open, and if the hot water supply has a temperature value above the programmed	See diagnostics Failure 11 : Fill Failure

wash sequence value then the temperature of the wash bath will be too high.	
3. Check the water temperature	If the temperature of the supplied hot water is too high: decrease the temperature of the hot water
4. Check if the temperature sensor is functioning	If the temperature sensor is defective: replace the temperature sensor
5. Check if the heating contactor stays closed (check voltage to contactor coil.)	If the heating contactor stays closed : Replace the heating contactor
6. Check the output relay that powers the heating contactor	If the relay stays closed and the relay is broken, replace the electronic board
7. Check the output relay that powers the heating contactor	If the relay is not broken, but receives a not allowed signal from the electronic board, replace the electronic board

FAILURE 18: THE OVERCURRENT SECURITY

When the motor overcurrent security has tripped the motors are switched off. The contact will be closed again automatically after some time.
It is possible that when fault 18 is generated that not the thermal overcurrent security has tripped but the thermal security of Motor 1 and 2 at the same time. The occurrence of this fault is exceptional (the thermal contact is only checked when an output relay for a motor is on).

DIAGNOSE:

1. Check if the overcurrent security is open.	If the overcurrent security is open, within 15 minutes the security will close automatically. If a motor is defective: the security can go open again when you restart the washing machine. If it was only a temperature problem and the motor is not defective: the overload security will not trip again.
2. If the overcurrent security is not closing after 15 minutes.	The overcurrent motor security will be probably defective.
3. If the overcurrent security is not open	Check if both motor securities are open. If both motor securities are open then there is a major motor problem.
4. Check the continuity of the wiring	If the wiring is not continuous: repair the wiring

FAILURE 19: M1 WASH + LOW SPIN MOTOR SECURITY

When the motor overcurrent security has tripped the motors are switched off. The contact will be closed again automatically after some time (the thermal contact is only checked when an output relay for a motor is on).

DIAGNOSE:

1. Check if the thermal security of the wash & low spin motor is open	If the thermal security is open, within 15 minutes the security will close automatically. If a motor is defective : the security can go open again when you restart the washing machine. If it was only a temperature problem and the motor is not defective: the overload security will not trip again.
2. Check if the temperature in the cabinet of the wash machine is becoming too high during a hot wash with a very long programmed wash time	While the machine is washing : the motor is heating up. When the ambient temperature is becoming important and the motor can't loose it's energy for a long period then the thermal contact can trip. Change the program or lower the ambient temperature.
3. If the thermal motor security is not closing after 15 minutes.	The thermal motor security will be probably broken.
4. Check the continuity of the wiring	If the wiring is not continuous: repair the wiring

FAILURE 20: M2 DISTRIBUTION + HIGH SPIN MOTOR SECURITY

When the motor overcurrent security has tripped the motors are switched off. The contact will be closed again automatically after some time (the thermal contact is only checked when an output relay for a motor is on).

DIAGNOSE:

1. Check if the thermal security of the distribution and high spin motor is open	If the thermal security is open, within 15 minutes the security will close automatically. If a motor is defective : the security can go open again when you restart the washing machine. If it was only a temperature problem and the motor is not defective: the overload security will not trip again.
2. If the thermal motor security is not closing after 15 minutes.	The thermal motor security will be probably broken.
3. Check the continuity of the wiring	If the wiring is not continuous: repair the wiring

FAILURE 21: OVERFLOW FAILURE

When the water level is raising above the hole of the overflow tube: message 21 will be displayed.

DIAGNOSE:

1. Check if the overflow hole and tube isn't blocked	If the overflow tube is blocked: repair the tube
2. Check if the drain tube isn't blocked	If the drain tube is blocked: repair the drain tube
3. Check the water inlet valves	If the water inlet valves are broken: replace the water inlet valves
4. Check the output relay that powers the inlet valve	If the relay stays closed and the relay is broken, replace the electronic board
5. Check the output relay that powers the inlet valve	If the relay is not broken, but receives a not allowed signal from the electronic board, replace the electronic board

FAILURE 22: FLUSH FAILURE

When the flush function is active and the machine is loosing 7 cm water then the drain will be opened. Message 22 will be displayed.

DIAGNOSE:

1. Check if the drain valve is not losing water	If the drain valve is defective: replace the drain valve
2. Check if the machine is not losing water	If the machine is losing water: replace the defective parts

FAILURE 23: DEFECTIVE PCB TEMPERATURE SENSOR

The temperature of the electronic board is measured. This value is used as a reference to adjust the water temperature and the water level.
When the on-board temperature sensor is measuring wrong then the water level and water temperature will show a value that is slightly different from the correct value. Fault 23 is only written to the log register when the power is switched off.

DIAGNOSE:

1. Check the electronic board visually	If you see some damage : replace the electronic board
2. If the fault is persistent	Replace the electronic board

FAILURE 24: DEFECTIVE LEVEL SENSOR

If the level sensor is broken then fault 24 will be displayed. The fault is only generated when the machine is in standby mode and no program is active.
The fault can only be erased by switching off and on the power.

DIAGNOSE:

1. Check the level sensor visually	If you see some damage: replace the electronic board
2. If the fault is persistent	Replace the electronic board (be sure that there is no drain problem)

FAILURE 25: DEFECTIVE TEMPERATURE SENSOR

When the temperature sensor is broken then fault 25 will be displayed. The fault is only generated when the machine is in standby mode and no program is active.
The fault can only be erased by switching off and on the power. If the fault is still active after switching on the power : fault 25 will be activated again.

DIAGNOSE:

1. Check if the temperature sensor is connected on the electronic Board.	The Female connector must be connected with the Male connector T of the electronic board.
2. Check the temperature sensor	If the temperature sensor is broken: replace the temperature sensor
3. Measure the resistance of the sensor	If the resistance is not OK: replace the temperature sensor
4. Check if the earth wire is at the middle position of the connector	If the earth wire is not at the middle position: put the earth wire in the middle position of connector T
5. Check the electronic board visually	If you see some damage : replace the electronic board
6. If the fault is persistent	Replace the electronic board Be sure that the problem is related to the electronic board and not to a defective temperature sensor

FAILURE 26: UNDEFINED FREQUENCY INVERTER ERROR CODE

This fault should never occur. Inform the manufacturer.

FAILURE 27: COMMUNICATION FAULT INVERTER

This fault will only occur when there is no communication between the electronic timer and the inverter.
The electronic timer is sending requests to the inverter, and the inverter is sending answers to the timer.
If the electronic timer is not receiving the answers within 5 seconds then fault 27 will be displayed.

The baud rate for the A024S/A044-EC Mitsubishi inverters is 9600. (= TTL communication)

The baud rate for the E500 series Mitsubishi inverters is 19200. (= RS485 communication)

Error 27 will occur if at the Configuration menu as Supply Voltage:

– TTL has been selected for the E500 series. (= wrong)

– a Supply Voltage Range has been selected for the A024S/A044-EC series. (= wrong)

Cause : the Full Control Wash Computer and the Inverter have to communicate with the same baud rate.

DIAGNOSE:

1.For a new inverter or timer : Check if the right machine type and Washing machine power supply have been selected.	When the Inverter parameters are loaded at the Configuration menu, make sure that you have selected the right machine type and washing machine power supply.
2. Check if the door is closed and locked	If the door is not closed then the inverter can not be powered. Close the door. If the door lock is broken, repair the door lock system
3. Check if the inverter is energized	Measure the voltage at the input of the inverter

4. Check if the fuses are still functional	If the fuses are blown up : replace the fuses
5. Check if the safety contactor is activated	If the safety contactor is broken : replace the contactor
6. Check if the connectors on both sides of the communication cable are still connected	Connect the connectors on the electronic board and the inverter.
7. Check if the wiring is still continue	Repair the wiring
8. Check if the output relays that activates the safety inverter contactor is functional	If the relay is broken, replace the electronic board
9. Check if the output relays that activates the safety inverter contactor is functional	If the relay is not broken, but doesn't receive a signal from the electronic board, replace the electronic board

FAILURE 28: THT TIME OUT

Fault 28 occurs when the software can not handle the THT fault of the frequency inverter.
This fault is a specific fault of the frequency inverter caused by an overcurrent.

DIAGNOSE:

1. Check if the correct machine type is selected in the Configuration Menu.	If the wrong machine type is selected, enter the right machine type
2. Check if the correct inverter parameters have been implemented.	Load the correct Inverter parameters.
3. Check if the fault is persistent	If the fault is persistent, contact the manufacturer

FAILURE 29: OV3 TIME OUT

Fault 29 occurs when the software can not handle the OV3 fault of the frequency inverter. This fault is a specific fault of the frequency inverter caused by an overvoltage during deceleration.

DIAGNOSE:

1. Check if the correct machine type is selected in the Configuration menu.	If the wrong machine type is selected, enter the right machine type
2. Check if the correct inverter parameters have been implemented.	Load the correct Inverter parameters.
3. Check if there was a high unbalance during extraction, which can be caused by putting only half loads in the machine.	Put always a full load in the machine drum. Do not put other material than textile linen (fabrics) in the machine.
4. Check if the fault is persistant	If the fault is persistent, contact the manufacturer

FAILURE 30: ALARM FREQUENCY INVERTER

Fault 30 occurs when the frequency inverter goes into alarm. Except for the THT and the OV3 fault where the timer software will reset the inverter automatically (only 1x). The active process will be interrupted immediately.

DIAGNOSE:

1. Check if the correct machine type is selected in the Configuration Menu.	If the wrong machine type is selected, enter the right machine type
2. Check if the correct inverter parameters have been implemented.	Load the correct Inverter parameters.
3. Check the frequency inverter error list to know what happened.(See manual inverter)	If the fault is persistent, contact the manufacturer

FAILURE 31: INITIALISATION FAULT INVERTER

While the parameter set of the frequency inverter is written to the EEPROM memory of the inverter and a fault occurs during this action then Fault 31 will be displayed.

IT IS NOT RECOMMENDED TO USE THE WASHING MACHINE AS THE INVERTER WILL FUNCTION WITH THE WRONG PARAMETERS SETTINGS.

Parameters Inverter Type FR-A024-S0.4K – S2.2K-EC :
P35 = 1 (external communication)
P77 = 1(disabling parameter writing)
P53 = 12 (communication interval)

If these 3 parameters do have another value, it is NOT possible to load the parameters by the „Full Control“ computer and a parameter copy-unit is needed.

DIAGNOSE:

1. Check if the door is closed and locked	If the door is not closed, close the door. If the door is not locked, repair the door lock system
2. Check if the inverter is energized	If the inverter is not energized, check the power to the inverter (see fault 27)
3. Write the parameters once more into the inverter	If the fault is persistent, contact the manufacturer

FAILURE 32: VERIFICATION FAULT INVERTER

The software of the electronic timer will check if the parameter settings are correct loaded. If not:

Fault 32 will be displayed. Fault message 32 can not be reset by the **ENTER** button.
The fault message can be erased by switching the power off / on.
The fault message can be erased by loading the correct parameter set.

DIAGNOSE:

1. Check if the correct machine type is selected in the Configuration Menu	If the wrong machine type is selected, enter the right machine type
2. Check if the door is closed and locked	If the door is not closed, close the door If the door is not locked, repair the door lock system
3. Check if the inverter is energized	If the inverter is not energized, check the power to the inverter (see fault 27)
4. Write the parameters once more into the inverter	If the fault is persistent, contact the manufacturer

FAILURE 33: STALL PREVENTION FUNCTION

This fault number indicates that the stall prevention of the frequency inverter is functioning now and then. The fault number is not displayed at the end of the program cycle. The number is only written to the error log register. The stall prevention function will only be activated to protect the motor for overcurrent.
This fault number is an indication that there is to much laundry loaded. It is also possible that due to the laundry the drum is not balanced what will produce an extra load for the motor.

DIAGNOSE:

1. Check if the drum is not overloaded	Enter the correct amount of laundry in the drum
2. Check if the correct machine type has been selected in the Config menu	The installed parameters are related to the motor and machine type size. If a wrong machine type was selected then the stall prevention will function for the wrong motor type. Select the right machine type.
3. Check if the correct inverter parameters have been implemented.	Load the correct Inverter parameters.
4. Check if there are mechanical parts broken	Broken parts can cause an unbalance of the drum. Replace the broken parts.

FAILURE 35: WRONG SOFTWARE VERSION

When a total new software that isn’t downward compatible with previous software versions is loaded, then the software will detect that the old and new software´s are not compatible.
You have to reconfigure the Full Control Wash Computer. See Chapter 4.

⚠ **ATTENTION !!!**
ALL THE CUSTOM SETTINGS WILL BE ERASED IN THE FULL CONTROL WASH COMPUTER BY LOADING THE FACTORY SETTINGS.

After reinitialisation of the Full Control Wash Computer, fault 35 can only be erased by switching the power Off/On.

FAILURE 36: DEFECTIVE MOTOR CONTACTOR

Fault 36 can only occur when the overcurrent thermal protection off both motor thermal protections are opened during the tumble sequence.
For generating the fault, the inputs of the thermal contacts must be high at the start of the tumble sequence and must be low at the end of the tumble sequence.

The fault is an indication that a spin motor is still energized due to it's spin contactor that stay closed while It's output relay is off. This is a fatal error and the door will not be unlocked. The door can only be opened by switching the power off and on.

REMARK:
THE BIMETAL WILL KEEP THE DOOR LOCKED. SO YOU WILL HAVE TO WAIT UNTIL THE BIMETAL HAS COOLED TO OPEN THE DOOR. IN THE CASE OF A SPRING, YOU HAVE TO OPEN THE DOOR BY THE MECHANICAL OVERRIDE.

DIAGNOSE:

1. Check if the drum is still spinning	For all intervention Switch off the power
2. Check if the spin contactor is broken	If the spin contactor is broken replace the spin contactor
3. Check if an output relay for the spin motor stay closed or is broken	If the relay is broken, replace the electronic board
4. Check if the output relay for the spin motor stay closed	If the relay is not broken, but receives a not allowed signal from the electronic board, replace the electronic board
5. Check if there is no short circuit on the wiring so that the spin contactor stay on.	Repair the wiring if a short circuit is found

FAILURE 37: DRAIN FAILURE AT THE SPRAY SEQUENCE

Failure 37 occurs when the electronic timer detects that the water is not drained after 3 minutes AT the Spray Sequence.

DIAGNOSE:

1. Check the drain tube of the washing machine	If the drain tube is blocked: repair the drain tube
2. Check the drain valve	If the drain valve is defective: replace the drain valve
3. Check the wiring: verify if the drain valve is Switched OFF The drain valve is normal open.	If the wiring is damaged: repair the wiring

FAILURE 38: NO RECYCLE WATER

Failure 38 occurs when the electronic timer detects that the Water Recycle tank is empty.

An Error message is generated to alert the operator, that the washing machine has switched over to Soft Cold Water as there is no water from the Water Recycle tank Available.

Only for machines with a Front Soap Hopper.

DIAGNOSE:

1. Check the water level from the water recycle tank	Add water to the water Recycle tank

FAILURE 39: EMPTY SOAP SUPPLY BOX

Failure 39 occurs when the electronic timer detects that the Soap Reservoir is empty.

To avoid that No Liquid Soap is added at the wash process, the operator gets a warning when a Liquid Soap Supply Reservoir is almost empty.

DIAGNOSE:

1. Check if the Liquid Soap Supply is empty.	Add Soap to the Liquid Soap Supply System.

FAILURE 40: FILL FAILURE EMPTY WATER RECYCLING TANK

Failure 40 occurs when the electronic timer gets a signal that the water recycling tank is empty.

At the same time the Programmed water level will not raise anymore and an Error message will be generated if the Programmed water level is not reached in x minutes.

x = Max fill time, a value that can be programmed at the Initialisation Menu.

Only for machines with a Top Soap Hopper.

⚠ **ATTENTION !!!** : The rubber hose must be fixed with a fastener on the electronic water level Sensor.

DIAGNOSE:

1. Check the water level from the water recycle tank	Add water to the water Recycle tank
2. Check if the programmed Max fill time in the Initialisation menu is acceptable.	If the water flow is very small increase the value for the Max fill time. The default value is 10‘.
3. Check if the external water valves are open	If the water valves are closed: open the water inlet valves
4. Check if the water inlet valves are not blocked by dirt	If the water inlet valves are blocked by dirt: clean the water inlet valves or replace the water inlet valves
5. Check the coil of the water inlet valves	If the coil of the water inlet valve is open: replace the coil or the complete inlet valve
6. Check the drain valve	If the drain valve has failed: replace the drain valve
7. Check if the rubber hose (for measuring the water level) is well mounted on the electronic level sensor and on the drain valve	If the hose is not well mounted: install the rubber hose properly
8. Check if the hose on the electronic sensor is air tight.	If the air tube is not air tight: replace the air tube. With a fastener, you can make the hose air tight at the level sensor.
9. Check if the hose doesn’t contain water (siphon)	If the air hose contains water: remove the water and fix the hose so that it doesn’t work as a siphon
10. Check the continuity of the wiring	If the wiring is not continuous: repair the wiring
11. Check the output relay that powers the inlet valves and the drain valve	If the relay receives a command signal but is not closed, replace the electronic board
12. Check the output relay that powers the inlet valves and the drain valve	If the relay does not receives a command signal, replace the electronic board

FAILURE 41: SERVICE DUE WARNING

Failure 41 occurs when the cycle counter of the Electronic timer has reached the Programmed Value for Service due. The fault message will be erased by opening the door. If the cycle counter has not been reset the message will appear again at the end of the next wash cycle.

DIAGNOSE:

1. Check the cycle counter. The value can be found by pressing the SERVICE-STATE button. The second menu item shows the cycle counter.	You can reset the cycle counter in the Service Menu.

FAILURE 42: NO NETWORK CONNECTION

Failure 42 occurs when there is No Network Connection available.

For more information about the Networking see „Manual PC-Networking“.

DIAGNOSE:

1. Check the network cable.	If the network cable is broken, replace the network cable.
2. Check the RS232-RS485 converter	If the converter is out of order, replace it.

FAILURE 43: WRONG VOLTAGE RANGE SELECTION

Failure 43 occurs when the wrong Voltage Range has been selected in the Configuration menu.

Depending on the machine type and the inverter type, certain Voltage ranges are not allowed.

DIAGNOSE:

1. Check the Machine Identification plate at the back of the machine.	Select the same Voltage range in the Configuration menu as on the Identification plate of your washing machine. Menu Item C:Supply Voltage

FAILURE 44: WRONG INVERTER MODEL TYPE

Failure 44 occurs when the wrong Inverter Model Type has been detected by the MCB 40 software.

Before loading the parameters from the Wash Computer to the Mitsubishi inverter, the inverter type is checked first.

DIAGNOSE:

1. Check if you have selected the correct machine type.	Select the correct machine type in the Configuration menu. Menu Item C:Machine Type
2. Check the Machine Identification plate at the back of the machine.	Select the same Voltage range in the Configuration menu as on the Identification plate of your washing machine. Menu Item C:Supply Voltage

FAILURE 45: NO SPEED SENSOR SIGNAL

F120 machine only. Failure 45 occurs when the speed sensor is not sending pulses to the Wash Computer while the drum turns.

The machine is still operational when the speed sensor is out of order. But as the machine operation is deteriorated an intervention of a technician is required.

DIAGNOSE:

1. Check if the head of the speed sensor is mounted at a correct distance from the reference	Check the installation and maintenance manual how to mount the speed sensor at a correct

points on the drum pulley.	distance.
2. Check the wiring.	If the wiring is damaged: repair the wiring.
3. Check the well functioning of the speed sensor. (The actual speed value is available at the Service – State menu)	If the speed sensor is broken or not well functioning, replace the speed sensor.
4. Check the electronic board. (Inputs can be checked one by one in the Service menu)	If the input of the electronic board is not functional, replace the electronic board.

FAILURE 46: BRAKE STAYS CLOSED

F120 machine only. Failure 46 occurs when the mechanical brake stays closed. When the brake stays closed, at acceleration at spin between 250 and 350 RPM, a too high motor current is detected and the machine is stopped at once. The machine should not be operated when the brake is out of order. As the machine operation is deteriorated an intervention of a technician is required.

DIAGNOSE:

1. Check if the main air pressure is available.	Apply the correct air pressure.
2. Check if the air pressure that controls the brake is available.	If the air pressure valves are out of order, repair or replace the corresponding air pressure valves.
3. Check the brake control signal wiring that commands the brake air pressure valve.	If the wiring is damaged: repair the wiring.
4. Check the output relay that powers the control signal for the brake air pressure valve.	If the relay receives a command signal but is not closed, replace the electronic board
5. Check the output relay that powers the control signal for the brake air pressure valve.	If the relay does not receives a command signal, replace the electronic board

FAILURE 47: BREAK WEAR OUT SIGNAL

F120 machine only. Failure 47 occurs when the friction blocks of the brake are weared out. At the moment that the friction blocks are almost vanished, two wires will be short circuited when they touch the metal friction plate. The friction blocks must be replaced at once to avoid heating up of the mechanical brake as this can damage the machine and lead to an unsafe state.

DIAGNOSE:

1. Check if the friction blocks must be replaced.	If the friction blocks have almost vanished, they must be replaced.
2. Check if the wiring of the input signal Break Wear Out is not damaged.	If the wiring is damaged: repair the wiring.
3. Check the electronic board. (Inputs can be checked one by one in the Service menu)	If the input of the electronic board is not functional, replace the electronic board.

FAILURE 48: BRAKE STAYS OPEN

F120 machine only. Failure 48 occurs when the mechanical brake stays open. When the brake stays open, the free run time of the machine at deceleration after spin will be much bigger then normal. The machine is still operational when the brake is out of order. But as the machine operation is deteriorated an intervention of a technician is required.

DIAGNOSE:

1. Check if the main air pressure is available.	Apply the correct air pressure.
2. Check if the air pressure that controls the brake is available.	If the air pressure valves are out of order, repair or replace the corresponding air pressure valves.
3. Check the brake control signal wiring that	If the wiring is damaged: repair the wiring.

commands the brake air pressure valve.	
4. Check the output relay that powers the control signal for the brake air pressure valve.	If the relay receives a command signal but is not closed, replace the electronic board
5. Check the output relay that powers the control signal for the brake air pressure valve.	If the relay does not receives a command signal, replace the electronic board

FAILURE 49: UNBALANCE SWITCH AT WASH

F120 machine only. Failure 49 occurs at the wash action when the air suspension, due to some problem, is without compressed air. This must prevent mechanical damage when the mechanical movements at wash action get too big. When the tub is moving a lot, the unbalance switch will be activated and the wash process will be stopped by the wash computer.

DIAGNOSE:

1. Check if there if the washing machine is supplied with compressed air.	Supply the washing machine with compressed air.
2. Check if the air pressure valves are functional.	If the air pressure valves are not functional, repair or replace the valves. See installation/ Maintenance manual.
3. Check if the air suspension is not damaged.	If the air suspension is damaged, replace the air suspension. See installation/Maintenance manual.
4. Check the position of the out of balance switch.	If the out of balance switch is not correctly mounted, install the out of balance switch properly
5. Check the wiring, the contact of the out of balance switch is normally closed Check connector pins for loose connections	If there is no continuity: repair the wiring
6. Check the electronic board. (Inputs can be checked one by one in the Service menu)	If the input of the electronic board is not functional, replace the electronic board.

FAILURE 50-51: ERROR NO SECOND-THIRD ACCELERATION RAMP

F120 machine only. Failures 50-51 occur when the washing machine is not accelerating to the programmed extraction speed with the standard spin ramp but with the wash speed ramp. In normal operation, the machine accelerates slowly to it's maximal speed. (The software is only monitoring Error 50 and 51 when the maximal spin speed has been programmed.)

DIAGNOSE:

1. Check if the wire bridges at the terminals of the Mitsubishi inverter are present.	When a new inverter is installed, the wire bridges at the terminals of the Mitsubishi inverter must be installed. (See electrical drawing)
2. Check if the wire bridges at the terminals make electrical contact.	If there is no continuity between the terminals at the wire bridges, make a good connection by tightening the screws at the terminals.
3. Check if the right Mitsubishi inverter parameters have been loaded.	Load the correct Mitsubishi inverter parameters.
4. If the problem is persistent check first all other diagnose options.	Replace the Mitsubishi inverter.

FAILURE 52: PCB-EEPROM CRC FAILURE MCB EC ONLY

At Power-up the wash computer checks if the factory settings in the EEPROM memory are still ok.
(Wrong CRC reading data from EEPROM)
Wash computer to be reset at manufacturer by Factory Test validation procedure.

FAILURE 53: PCB-EEPROM DATA OUT OF RANGE FAILURE MCB EC ONLY

At Power-up the wash computer checks if the factory settings in the EEPROM memory are still ok.

(Data out of range reading data from EEPROM)
Wash computer to be reset at manufacturer by Factory Test validation procedure.

FAILURE 54: LOCK ACTIVE

Failure 54 occurs when at standby the door lock is locked nevertheless the door is open.
Before further usage of washing machine, door lock must be unlocked first by technical intervention.

DIAGNOSE:

1. Check correct functioning of door lock system.	If door lock system is broken repair door lock system.

FAILURE 55: LOCK START

Failure 55 occurs when at startup the door is locked nevertheless the door is open.
Before further usage of washing machine, door lock must be unlocked first by technical intervention.

DIAGNOSE:

1. Check correct functioning of door lock system.	If door lock system is broken repair door lock system.

(FAILURE 52: ERROR INNER DOOR HANDLE NOT LOCKED) MCB 40 ONLY

MB machines only. Failures 52 occurs when the Door Handle to lock the Inner Door has not been put in it's locked position. A switch at the outer door detects the position of the handle.
(The software is only monitoring Error 52 at wash speed.)

DIAGNOSE:

1. Check if the Inner Door Lock Handle is at it's locked position.	Close and Lock the Inner Door properly.
2. Check the mechanical functionality of the Inner Door Lock Handle system.	If the mechanical Inner Door Lock Handle System is out of order, repair or replace the broken parts.
Check the position of the electrical switch at the outer door.	The position of the electrical switch must be exactly as specified in the Installation and maintenance manual.
3. Check the functionality of the electrical switch at the outer door. Normal Closed Contact.	If the electrical switch is not 100% functional replace the electrical switch.
4. Check the continuity of the wiring. Check connector pins for loose connections.	If the wiring is not continuous: repair the wiring.
5. Check the electronic board. (Inputs can be checked one by one in the Service menu)	If the input of the electronic board is not functional, replace the electronic board.

(FAILURE 53-56: ERROR MAGNETIC SENSOR) MCB 40 ONLY

MB machines only.
Failures 53, 55 occurs when the inner door of the drum gets too close to the tub at wash speed.
Failures 54, 56 occurs when the inner door of the drum gets too close to the tub at spin speed.
Error 54 occurs only after 2 software tilts.
Error 53, 55, 56 can only be reset in the Service menu.
Go to the menu item "Reset Magn Sensor Error Y/N" and press the **Yes** and **ENTER** button.

IN CASE OF ERROR 55, 56 A POWER RESET IS REQUIRED

⚠ **ATTENTION !!!**
BEFORE YOU RESET ERRORS 53, 55, 56 IN THE SERVICE MENU, THE INNER DOORS OF THE MB MACHINE MUST BE INSPECTED FIRST BY A QUALIFIED SERVICEMEN.
ASK FOR TECHNICAL ASSISTANCE FROM YOUR LOCAL DEALER OR MANUFACTURER.
WHEN ERROR 54 OCCURS OFTEN ASK ALSO FOR TECHNICAL ASISTANCE.

FAILURE 57: DOOR LOCKED

MB90-140-180 machines only. Failure 57 occurs when the “Door Lock Switch” stays locked when the outer door has been unlocked pneumatically and opened by hand. Purpose is to find out at the unload sequence if “Door Lock Switch” is broken. (Normal Open Contact that stays closed)

DIAGNOSE:

1. Check the functioning of the “DOOR LOCK SWITCH”.	If the door switch is broken or functions not 100%: replace “DOOR LOCK SWITCH”.
2. Check the mechanical functionality of the door lock.	If the door lock is not functioning mechanically: replace the door lock system.
3. Check the continuity of the wiring.	If the wiring is not continuous: repair the wiring.
4. Check the functionality of the pneumatic lock system.	If the door lock is not functioning pneumatically: repair or replace the defective system.
5. Check the input signal from the “DOOR LOCK SWITCH”.	If the electronic board input doesn’t correspond with the state of the signal of the switch, replace the electronic board.

⚠ **ATTENTION !!!**

YOU CAN STILL UNLOAD THE FABRICS FROM ALL COMPARTMENTS BY OVERRULING THE ERROR MESSAGE BY PRESSING THE START BUTTON WHEN THE MESSAGE “CONTINUE >> START” OCCURS

ASK FOR TECHNICAL ASSISTANCE FROM YOUR LOCAL DEALER TO SOLVE THE TECHNICAL PROBLEM BEFORE STARTING A NEW WASH CYCLE

FAILURE 80: TIME OUT INPUT 16

Failure 80 occurs when the On Hold Signal of the Liquid Supply Central Dispensing System stays high for more then 1 hour. At Input 16 of the wash computer, the Liquid Supply Central Dispensing System sends a "High" signal that makes that the washing machine waits at the Wash Sequence to add Liquid Supply until the Liquid Supply Central Dispensing System has pumped it's liquid supplies inside the washing machine. When the On Hold signal is "LOW" the wash program is NOT put On Hold.

When the On Hold signal is "HIGH" the wash program is put On Hold.

In normal operation the On Hold Signal of the Liquid Supply Central Dispensing System must not stay high for more then 1 hour, as otherwise the machine will not finish the running wash cycle anymore.

DIAGNOSE:

1. Check if the Central Soap Dispensing System operates correctly.	Repair Liquid Supply Central Dispensing System in case of failure.
2. Check if the wiring of the input signal "On Hold" is not damaged.	If the wiring is damaged: repair the wiring.
3. Check the electronic board. (Inputs can be checked one by one in the Service menu)	If the input of the electronic board is not functional, replace the electronic board.

FAILURE 81: No Reheat

MB machine only. Failure 81 occurs when the heating is not restarted (at the wash sequence) when the water temperature of the bath is below it's normal programmed value. When the temperature drops below the predefined temperature limit of a hygienic wash cycle, the wash cycle can not be validated for hygienic reasons as the wash process has not followed the standards of the wash program in execution. This mean that the linen can not be unloaded at the hygienic side of the MB-machine and must be washed again after repairing the problem with the heating system.

DIAGNOSE:

Check Diagnostics Failure 13 : Heating Failure, and Failure 14 : Heating Time Failure

FAILURE 82: No Refill

MB machine only. Failure 82 occurs when the water filling is not restarted (at the wash sequence) when the water level of the bath is below it's normal programmed value. When the water level drops below the predefined water level limit of a hygienic wash cycle, the wash cycle can not be validated for hygienic reasons as the wash process has not followed the standards of the wash program in execution. This mean that the linen can not be unloaded at the hygienic side of the MB-machine and must be washed again after repairing the problem with the water fill system.

DIAGNOSE:

Check Diagnostics Failure 11 : Fill Failure

FAILURE 83: CYCLE FAIL

MB machine only. Failure 83 occurs when the wash cycle can not be validated for hygienic reasons as the wash process has not followed the standards of the wash program in execution.This mean that the linen can not be unloaded at the hygienic side of the MB-machine and must be washed again after repairing the problem. The Error message is only for information purposes and at the end of the wash cycle the operator will get a warning the wash cycle must be repeated.

DIAGNOSE:

See Extra Error message that shows the cause of the failure.

FAILURE 84: NO STORE PC

MB machine only. Failure 84 occurs when the function to store all wash process data for a hygienic wash cycle on a PC has failed. Some governments require traceability of wash cycle data in case of hygienic wash cycles. This data can be send to a PC and stored for a long period.

If this wash process data is not transferred to the PC at the end of the hygienic wash cycle, the operator will see the Error message so that he can solve the communication problem before starting a new wash cycle.

DIAGNOSE:

For more information about set-up and diagnostics see Manual Traceability Software for PC.

FAILURE 85: RTC LOW BATTERY

MB machine only. Failure 85 occurs when there is no battery available at the real time clock, or if the power of the battery is too small to make the real time clock run correctly. On MB machines which are prepared for tracebility of hygienic wash cycles, the machines must be executed with a real time clock for date and time registration.

DIAGNOSE:

1. Check if there is a battery.	If not, put a battery at the real time clock.
2. Check if the battery is still ok.	Replace the battery in case of low power.

FAILURE 86: NO RTC COMMUNICATION

MB machine only. Failure 86 occurs when the real time clock is not connected to the wash computer. As a result there is no communication between the real time clock and the wash computer, so the wash computer fails to register date and time. On MB machines which are prepared for traceability of hygienic wash cycles, the machines must be executed with a real time clock for wash cycle date and time registration.

DIAGNOSE:

1. Check if the real time clock is available.	Connect the real time clock at its place.
2. Check if the real time clock is functional.	If the real time clock is broken replace it.
3. Check the electronic board.	If the electronic board is out of order, replace the electronic board.

FAILURE 95: WATCH DOG

If the watch dog has been activated, message 95 is logged in the Error log register. If this occurs often, ask the help of a technician.

FAILURE 300-353: MITSUBISHI INVERTER ALARM MESSAGE

If a Mitsubishi Inverter Alarm occurs, check the trouble shooting in the Mitsubishi inverter manual.

300 Err OC1	308 Err FAN	316 Err RET	324 Err OP2	332 Err MB5	340 Err E.3	348 USB
301 Err OC2	309 Err OLT	317 Err CPU	325 Err OP3	333 Err MB6	341 Err ILF	349 OS
302 Err OC3	310 Err BE	318 Err E.6	326 Err CTE	334 Err MB7	342 Err PTC	350 OD
303 Err OV1	311 Err GF	319 Err E.7	327 Err P24	335 Err FIN	343 Err PE2	351 EP
304 Err OV2	312 Err OHT	320 Err IPF	328 Err MB1	336 Err OSD	344 Err CDO	352 E.11
305 Err OV3	313 Err OPT	321 Err UVT	329 Err MB2	337 Err ECT	345 Err IOH	353 E.13
306 Err THT	314 Err PE	322 Err LF	330 Err MB3	338 Err E.1	346 Err SER	
307 Err THM	315 Err PUE	323 Err OP1	331 Err MB4	339 Err E.2	347 Err AIE	

DIAGNOSE FOR FAILURE 300-301-302: OC-ERRORS

1. Check if there is no short circuit on the output of the inverter. (loose wire of motor cable,…)	Repair the short circuit.
2. Check if there is no short circuit in the Terminal Box of the motor. (loose wire of the motor cable, screws or other metal pieces who can move inside the terminal box.)	Repair the short circuit. Make sure the screws are sufficiently tightened.

DIAGNOSE FOR FAILURE 303-304-305 : OV-ERRORS

If there is too much regenerative energy coming from the motor (working as a generator) to the inverter, the voltage on the capacitors will become too high and the inverter goes into OV-alarm state.

1. Check if the correct machine type is selected in the S-submenu	If the wrong machine type is selected, enter the right machine type
2. Check if there was a high unbalance during extraction, which can be caused by putting only half loads in the machine.	Put always a full load in the machine drum. Do not put other material than textile linen (fabrics) in the machine.
3. Check if the fault is persistent	If the fault is persistent, contact the manufacturer

DIAGNOSE FOR FAILURE 306: THT-ERROR

If the output current of the inverter is abnormal high for some time, the inverter will go into THT-alarm state.

1. Check if the power supply is sufficient high and stable during extraction with load.	Repair the power supply.
2. Check if the drum rotates normally by hand. (no abnormal high friction)	Repair / clean what is necessary.
3. Check if the correct machine type is selected in the S-Menu.	If the wrong machine type is selected, enter the right machine type.
4. Check if the correct parameters have been loaded in the inverter.	If the correct parameters are not loaded in the inverter, load the correct parameters.

DIAGNOSE FOR FAILURE 307: THM-ERROR

If the motor current is higher than allowed for a longer time, the inverter will active the electronic overcurrent protection to prevent the motor from overheating and the inverter will go into THM-alarm state.

1. Check if the drum rotates normally by hand. (no abnormal high friction)	Repair / clean what is necessary.

2. Check if the correct machine type is selected in the S-Menu.	If the wrong machine type is selected, enter the right machine type.
3. Check if the correct parameters have been loaded in the inverter.	If the correct parameters are not loaded in the inverter, load the correct parameters.
4. Check if the fault is persistent.	If the fault is persistent, contact the manufacturer.

DIAGNOSE FOR FAILURE 313: OPT-ERROR

If the inverter doesn't receive requests from the wash computer (= no serial communication), after some time (about 10-30 seconds), the inverter will go into OPT-alarm state.

1. Check at the end of the wash cycle, if the power supply contactor of the frequency inverter switches is switched off on all phases.	Replace the contactor if the problem is persistent.

The OPT-ERROR can happen occasionally by a very short general mains power supply interruption. (Due to the power interruption, the inverter was not able to reset itself correctly.)

=> In such case the contactor must not be replaced. The Inverter must be reset by a longer power interruption.

DIAGNOSE FOR FAILURE 335: FIN-ERROR

If the heatsink temperature of the inverter crosses it's max allowed operation temperature, the inverter will go into FIN-alarm state.

1. Check if the cooling fan of the inverter (if present) rotates normally.	Replace the cooling fan on the inverter (on the heatsink of the inverter).
2. Check if the cooling fan in the washer that takes fresh air to the inverter's environment (if present) rotates normally.	Replace the cooling fan of the washer.
3. Check if the heatsink or the cooling fans are not clogged with dust/dirt so that fresh air can circulate freely.	Clean what is necessary.
4. Check if the ambient temperature of the washer is within the specified limits (see installation manual).	Take care that the ambient temperature is within the specified limits.

FAILURE 150-165: MEMORY ERRORS

If a memory error occurs then something is going wrong with the eeprom.

Try to reload the Programs. Check for source of electrical “noise“.

FAILURE 170-199: SOFTWARE ERRORS

Software errors must never occur. If a software error message occurs inform the manufacturer.

9. SERVICE INFORMATION

⚠ **ATTENTION !!!**
PROFESSIONAL REPAIRS IN ELECTRO INSTALLATION CAN BE CARRIED OUT ONLY BY SERVICE ORGANIZATION WITH PERMISSION GIVEN BY PRODUCER / SUPPLIER.

IN CASE OF ANY MAINTENANCE OR REPAIR DISCONNECT THE MACHINE FROM SOURCE OF ENERGY AND WAIT UNTIL THE MACHINE COOLS DOWN OR DRAINS WATER.

PLEASE FOLLOW ALL INSTRUCTIONS IN THE MANUALS AND THE LABELS AND AS WELL AS VALID BASIC SECURITY LAWS IN ORDER TO PREVENT BURNS AND SCALDS AND INJURIES CAUSED BY ELECTRICITY.

9.1. MAINTENANCE

Remove dirt from the keyboard by a damp cloth after disconnection from the power supply.

⚠ **ATTENTION !!!**
DO NOT USE AGGRESSIVE SOAPS, CAUSTIC CHEMICALS, GASOLINE OR OTHER PETROCHEMICAL SUBSTANCES WHICH CAN DAMAGE THE KEYBOARD.

9.2. INFORMATION FOR SERVICE

⚠ **ATTENTION !!!**
EVERY ELECTRONIC BOARD HAS A STICKER PLACED ON THE EPROM, WHICH SPECIFIES THE VERSION AND THE DATE OF THE SOFTWARE. THIS DATA ALONG WITH THE MACHINE SERIAL NO., ORDER CODE MUST BE GIVEN IN ALL CORRESPONDENCE OR INQUIRIES TO THE MANUFACTURER.

❑ SOFTWARE VERSION AND DATE

MARKING FRAME : XXX-V.VV
V.VV stands for software Version

Current wash computer 1 piece execution : **Full Control Software**

MCB FC : **XXX =**	**535**	(West European language Texts)
	546	(East European language Texts)

Old wash computer 2 piece execution : **MCB 40 Software**
(Micro controller board + PWR (power board)

MCB 40 : **XXX =**	**183**	(West European language Texts)
	194	(East European language Texts)

9.3. PROGRAMMER ELECTRONIC BOARD

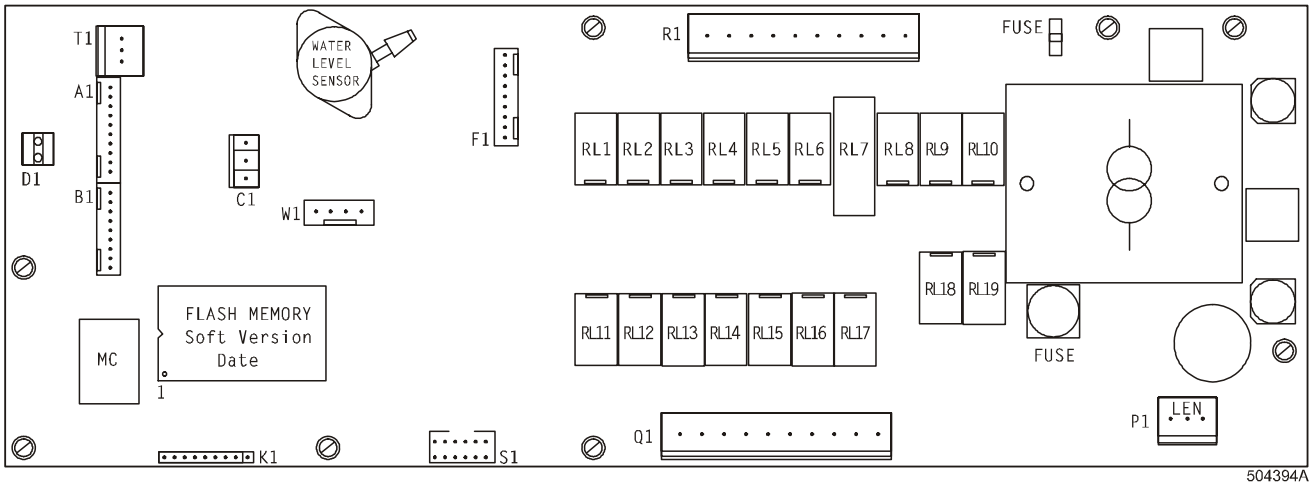

⚠ **WARNING !**

CONNECTION TO THE WRONG VOLTAGE SUPPLY MAY CAUSE SERIOUS BODILY INJURY AS WELL AS DAMAGE TO THE ELECTRONIC PARTS AND TO THE WASHING MACHINE ITSELF.

- Voltage	:	200-240 Vac, 50/60 Hz
- Power	:	max 16 VA
- Memory	:	EPROM (contains the software) EEPROM (contains the customised programs)
- Outputs	:	19 relays
- Serial interface	:	RS485 (2 wire) networking between wash computer and external device (PC Computer)
- Display	:	LCD display

9.4. INSTRUCTIONS FOR REPLACING THE ELECTRONIC BOARD AND KEYPAD

- ❑ Switch off the main power supply.
- ❑ Open the cover plate of the washing machine.
- ❑ Remove the connectors from the electronic board and remove the little hose from the level sensor.
- ❑ Remove the pin that is holding the electronic board at the middle of the fascia panel (if implemented).
- ❑ Remove the combination keyboard - electronic timer by the front side of the fascia panel. Remove the two screws and pull the keypad carefully by the front side.
- ❑ Put the new combination keyboard – electronic timer into the machine and tighten the two screws.
- ❑ Put the pin back at it‘s original position.
- ❑ Reconnect all the connectors and put the little hose back on the level sensor.
- ❑ Close the cover plate of the washing machine.
- ❑ Now you can Switch On the power supply.
- ❑ The display should illuminate.

⚠ **ATTENTION !!!**

MAKE SURE THAT THE LITTLE HOSE OF THE LEVEL SENSOR IS WELL TIGHTEND WITH A FASTENER. IF THE HOSE IS NOT AIR TIGHT THEN THE LEVEL SENSOR WILL NOT MAKE A CORRECT MEASUREMENT

MAKE SURE THAT YOU DON’T DAMAGE THE FLEX CABLE OF THE KEYPAD WHEN YOU PUT THE FULL CONTROL WASH COMPUTER BACK INTO THE MACHINE.

9.5. INSTRUCTIONS FOR INSTALLING NEW SOFTWARE

- ❑ Switch off the main power.
- ❑ Open the cover plate of the washing machine.
- ❑ Take the combination keyboard-electronic timer out of the machine. See also paragraph 9.4.
- ❑ The EPROM with the implemented software is the only IC on the electronic board that can be removed.
- ❑ Take the EPROM out of the IC-holder and replace it by a new one.
- ❑ Make sure that you put the new chip at the right position. See picture.
- ❑ Put the combination keyboard-electronic timer back at it's original position.
- ❑ Reconnect all the connectors and put the little hose back on the level sensor. **(fastener!)**
- ❑ Close the cover plate of the washing machine.
- ❑ Switch on the main power.
- ❑ The display should illuminate.
- ❑ If the software is compatible with the previous software: the new software can be used without re-initialisation.
- ❑ You have to clear all the error messages in the Service-menu, if you want to make a correct inspection of the functioning of the new installed software.
- ❑ If the software is not 100% compatible with the previous software version:
  - ◆ The new software will generate a diagnostic message 35. When fault message 35 occurs you have to reset the settings of the configuration and initialisation menu.
  - ◆ This can be easily done by Selecting **Reset Factory Settings** in the Configuration Menu.
    ➔ **This is explained in Chapter 3 : Basic Description of Controls.**
  - ◆ Go through the Menu items of the Configuration and Initialisation Menu one by one to ensure that all the settings do correspond with the ones you prefer.
  - ◆ All the Custom Settings will be lost.
- ❑ Switch the power Off/On.
- ❑ Now the Full Control Washing machine computer is ready to start a new cycle.

⚠ **ATTENTION !!!**
FOR A PRACTICAL WAY OF WORKING FOR CHANGING THE EPROM : TAKE THE ELECTRONIC BOARD OUT OF THE WASHING MACHINE BY THE FRONT SIDE OF THE FACIA PANEL.
See Paragraph 9.4.

10. SPECIFICATION OF YOUR MACHINE

❑ MACHINE DATA

◆ type	:……		◆ phases	:	……..
◆ serial number	:……		◆ frequency	:	……..
◆ voltage	:……		◆ output	:	……..
◆ water supply	:	❑ cold soft	❑ cold hard		❑ hot soft
◆ heating	:	❑ electric…… kW	❑ hot water		❑ steam

❑ ELECTRONIC DATA

Programmer type :

- ◆ serial number : ……
- ◆ software version : ……
- ◆ software date : ……
- ◆ keyboard : ……

❑ MACHINE CONFIGURATION DATA

FUNCTION			DATA ENTERED	
◆ MACHINE TYPE		:	……	
◆ BRIGHTNESS DISPLAY		:	……	
◆ FREQUENCY CONTROL		:	❑ Yes	❑ No
◆ SUPPLY VOLTAGE		:	……	
◆ N° OF INLETS		:	❑ 2	❑ 3
◆ DRAIN VALVE 2		:	❑ Yes	❑ No
◆ SUPPLY SIGNAL	1 / A	:	❑ Hopper	❑ Liquid
	2 / B	:	❑ Hopper	❑ Liquid
	3 / C	:	❑ Hopper	❑ Liquid
	4 / D	:	❑ Hopper	❑ Liquid
	5 / E	:	❑ Hopper	❑ Liquid
◆ LIQUID SUPPLY SIGNALS		:	❑ Yes	❑ No
◆ MINIMUM LEVEL START SUPPLY		:	…….. Units	
◆ LS-FLUSH PRE-TIME		:	…….. Seconds	
◆ LS-FLUSH AFTER-TIME		:	…….. Seconds	
◆ TEMPERATURE		:	❑ Celsius	❑ Fahrenheit
◆ FULL HEATING		:	…….. %	
◆ WET CLEANING		:	❑ Yes	❑ No
◆ LOW WATER PRESSURE		:	❑ Yes	❑ No

❑ MACHINE INITIALISATION DATA

FUNCTION		DATA ENTERED			
◆ LANGUAGE	:	……..			
◆ SERVICE INTERVALL	:	……..			
◆ BUZZER TIME	:	…….. Seconds			
◆ ALLOW ADVANCE	:	❑ Yes	❑ No		
◆ AUTOMATIC COOLDOWN	:	❑ Yes	❑ No		
◆ WAIT FOR TEMP	:	❑ Yes	❑ No		
◆ MANUAL OVERRIDE	:	❑ Yes	❑ No		
◆ TEMPERATURE BALANCE	:	❑ Yes	❑ No		
◆ WASH MOTOR ON TIME	:	…….. Seconds			
◆ WASH MOTOR OFF TIME	:	…….. Seconds			
◆ ALLOW DISPLAY ECONOMIC	:	❑ Yes	❑ No		
◆ BOILER TEMPERATURE	:	❑ 50	❑ 60	❑ 70	❑ 80°C
◆ TEMP OVERSHOOT PROTECTION	:	- …….. %			
◆ MAX. HEATING TIME	:	…….. Minutes			
◆ MAX. WATERFILL TIME	:	…….. Minutes			
◆ MAX. LEVEL OVERFILL	:	…….. Units			

11. INDEX

A

ADD STEP 42
ADDING A STEP AT THE END OF THE PROGRAM 42
ADVANCING A WASH PROGRAM..... 74
ALARM FREQUENCY INVERTER..... 114
ALLOW ADVANCE YES..... 23
ALLOW ADVANCE 75
ALLOW DISPLAY ECONOMIC..... 25
AUTOMATIC COOLDOWN..... 23

B

BASIC DESCRITPTION OF CONTROL... 6
BIMETAL/SPRING 108
BOILER TEMP..... 25
BRIGHTNESS DISPLAY 30
BUTTONS..... 4
BUZZER TIME 5 SEC..... 7, 23, 127

C

COMMUNICATION FAULT INVERTER 113
CONFIGURATION MENU..... 36
CONFIGURATION MENU..... 22,28
COOLDOWN FUNCTION 76
COPY FROM PROGRAM N 41
COPYING A PROGRAM 40
CREATION OF A WASH PROGRAM 9

D

DEFECTIVE LEVEL SENSOR..... 113
DEFECTIVE MOTOR CONTACTOR ... 116
DEFECTIVE PCB TEMPERATURE SENSOR..... 112
DEFECTIVE TEMPERATURE SENSOR 113
DELETE A PROGRAM..... 41
DELETE A STEP..... 43
DIAGNOSTIC MENU EXIT 101
DIAGNOSTIC PROGRAM..... 101
DIAGNOSTIC TEST SEQUENCE FOR MACHINES WITH FRONT SOAP HOPPER..... 103
DIAGNOSTIC TEST SEQUENCE FOR MACHINES WITH TOP SOAP HOPPER 102
DISPLAY MESSAGES..... 91
DOOR LOCK CHECK AT START FAILURE..... 107
DOOR SOLENOID SWITCH CLOSED FAILURE..... 108
DOOR SOLENOID SWITCH FAILURE 107
DOOR SWITCH FAILURE..... 107
DRAIN 0,51,67,68,70,71,79,80,92,106,116,127
DRAIN FAILURE 106
DRAIN FAILURE AT THE SPRAY SEQUENCE..... 116
DRAIN FAILURE COOLDOWN SEQUENCE..... 106
DRAIN VALVE 1,51,64,67,68,69,70,71
DRAIN VALVE..... 2,31
DRUM COMPARTMENTS..... 34

E

ECONOMIC..... 73
EDIT A PROGRAM..... 40
EDIT A STEP..... 42
ELECTRONIC DATA, ... 27
EMERGENCY STOP SWITCH.....4
EMPTY SOAP SUPPLY BOX..... 117
ENTER THE PROGRAM NAME 39
ERASE ALL WASH PROG 35
ERASE FAULT MESSAGES 98
EXIT STEP MENU 43
EXIT THE PROGRAM MENU..... 41
EXPLANATION ERROR MESSAGES. 106
FAULT MESSAGE..... 91

F

FAULT MESSAGES 91
FAULT N° 1 97
FILL FAILURE 109,117
FILL FAILURE EMPTY WATER RECYCLING TANK 117
FLUSH FAILURE 112
FLUSH FUNCTION..... 77
FRONT SOAP HOPPER WASHING MACHINES.....12,20,49,53,59,60,64,72

G

GIVE PROGRAM..... 39

H

HEATING.....4,24,76,80,109,110,127
HEATING FAILURE..... 109
HEATING PROCESS 76
HEATING TIME FAILURE..... 110
HOW TO GET INTO THE DIAGNOSTIC MENU 101
HOW TO GET INTO THE PROGRAM MENU 38
HOW TO GET INTO THE SERVICE MENU 97
HOW TO HANDLE FAILURE MESSAGES 78
HOW TO HANDLE FAULT MESSAGES,92
HOW TO HANDLE POWER INTERUPTIONS 79

I

I
LANGUAGE ENGLISH.....2
IMPLEMENTING A NEW PROGRAM ... 40
INFORMATION FOR SERVICE 124
INITIALISATION 22
INITIALISATION FAULT INVERTER.... 114
INITIALISATION MENU..... 22,68,72,74,76
INITIALIZATION MENU 28
INITIALIZING 22
INLET 2 3, 45
INLET 48, 59, 53, 56
INLETS .....1, 2, 3 ,80
INPUT 1 OFF..... 99
INSERT A STEP 42
INSTRUCTIONS FOR INSTALLING NEW SOFTWARE..... 126
INSTRUCTIONS FOR REPLACING THE ELECTRONIC BOARD AND KEYPAD.125

K

KEYSWITCH..... 4

L

LABELS.....4,124
LANGUAGE ENGLISH 35
LEGEND 82
LEVEL 45, 48, 53, 59, 56
LIMITS 11,12,20
LIQUID SUPPLY SIGNALS 31,32,34
LOAD INVERTER PARAMETERS 31
LOAD STANDART PROGRAMS..... 35
LOAD THE WASHING MACHINE..... 72

M

M1 WASH + LOW SPIN MOTOR SECURITY.....111
M2 DISTRIBUTION + HIGH SPIN MOTOR SECURITY.....112
MAGNET SENSOR 1..... 95
MAGNET SENSOR 2..... 95
MACHINE CONFIGURATION DATA.... 127
MACHINE DATA..... 127
MACHINE INITIALISATION DATA..... 127
MACHINE TYPE..... 29
MAIN MENU 38
MAIN MENU 22
MAIN MENU DIAGNOSTIC..... 101
MAIN MENU SERVICE..... 97
MAINTENANCE 124
MANUAL OVERRIDE YES..... 24
MANUAL OVERRIDE 75
MAX. HEATING TIME 26
MAX. LEVEL OVERFILL..... 26
MAX. WATER FILL TIME..... 26
MEMORY ERRORS..... 123
MENU EXIT.....49,57
MINIMUM LEVEL 32
MITSUBISHI INVERTER ALARM MESSAGE 123
MOTOR OFF TIME 25
MOTOR ON TIME 25

N

NAME PROG XX..... 39
NO DRAIN 0 X 98
NO RECYCLE WATER..... 116

O

OFF TIME SEC.....57,62
ON TIME SEC.....60, 62
ON TIME SEC.....46,52,54,57
OPEN SOAP BOX..... 78
OPERATION MENU..... 6,72
OUT OF BALANCE BEFORE SPIN..... 106
OUT OF BALANCE HIGH SPIN..... 107
OUT OF BALANCE NORMAL SPIN..... 106
OUTPUT POWER INVERTER..... 98

OV3 TIME OUT 114
OVERFILL FAILURE..... 109
OVERFLOW FAILURE..... 112
OVERVIEW 94

P

PAUSE..... 77
PRE-PROGRAMMED PROGRAMMES 82
PROBLEM CHECK LIST..... 105
PROGRAM..... 38
PROGRAM END..... 74
PROGRAM FUNCTIONS..... 39
PROGRAM MENU..... 38,41
PROGRAM N XX COPY 40
PROGRAM N XX EDIT..... 40
PROGRAM N XX NEW 40
PROGRAM N XX VIEW..... 39
PROGRAM STEP XX EXIT..... 68,69,71
PROGRAMMER CIRCUIT BOARD..... 125
PROGRAMMING
.....
3,44,67,135,137,139,141,143,145,147,149,1
..... 51
PROGRAMMING A DELAY TIME..... 73
PROGRAMMING EXTRACTION SPEED... 20
PROGRAMMING SUPPLIES 20
PROGRAMMING THE DRAIN
SEQUENCE..... 10
PROGRAMMING THE FUNCTIONS 11
PROGRAMMING THE INLET VALVES. 11
PROGRAMMING THE REVERSATION
MOTOR ON AND OFF TIMES..... 21
PROGRAMMING THE SEQUENCE TIME
..... 21
PROGRAMMING THE WASH
SEQUENCE..... 9
PROGRAMMING THE WASH SPEED.. 20
PROGRAMMING THE WATER LEVEL. 12
PROGRAMMING THE WATER
TEMPERATURE..... 11
PULLEY RATIO..... 99
PUT SOAP INTO THE SOAPHOPPER. 72

R

RESET CYRCLE COUNTER NO..... 99
RESET FACTORY SETTINGS..... 30
RESET MAGN SENSOR ERR 99
RPM 45,64
RPM (REVOLUTIONS PER MINUTE) ... 82
RPM 59,68
RPM 48,51,53,56,62

S

SOFTWARE VERSION 1.00..... 97
SELECT THE PROGRAM NUMBER..... 39
SELECTING THE DRAIN/EXTRACTION
PART..... 67
SELECTING THE WASH PART..... 44
SERVICE - STATE..... 79
SERVICE DUE WARNING
.....118,119,120,121
SERVICE INFORMATION..... 124
SERVICE INTERVALL1500 23
SERVICE MENU 97
SERVICE MENU EXIT.....100
SIGNAL ..9,21,47,50,52,55,58,61,63,66,105
SOAP BOXES 81
SOAP SUPPLY MENU EXIT.....53
SOAP SUPPLY MENU EXIT.....46,60,64
SOFTWARE ERRORS.....123
SPD DISTRIBUTE.....64
SPECIAL FUNCTION BUTTONS 79
SPECIFICATION OF YOUR MACHINE127
SPEED ADJUST.....4,80
SPRAY 1
SPRAY 2
SPRAY FUNCTION.....77
STALL PREVENTION FUNCTION 115
START SUPPLY 0,32
STARTING A WASH PROGRAM.....72
STARTING UP.....72
STEP MENU.....43
STEP PROGRAM STEP FUNCTION.....42
STEP PROGRAMMING THE WASH
PART.....44
STEP XX EXIT.....68,70
STOP..... 4,77,78,79,92,101
SUPPLY ?.....46
SUPPLY ?..... 49,53,57,60,64
SUPPLY SIGN HOPPER.....32
SUPPLY TIMES.....82
SUPPLY VOLTAGE.....30
SWITCHING ON THE POWER.....72

T

TEMP OVERSHOOT PROTECTION 25
TEMPERATURE BALANCE YES.....24
TEST PRESS START 101
TEST SEQUENCE.....102
TH OVERCURRENT SECURITY 111
THE ACTIVE PROGRAM.....73
THE COOLDOWN SEQUENCE.....51
THE DRAIN SEQUENCE 67,68,71
THE EXTRACT SEQUENCE 68
THE FINAL RINSE SEQUENCE.....56
THE FLUSH SEQUENCE.....62
THE HIGH EXTRACT SEQUENCE.....70
THE LOW EXTRACT SEQUENCE.....69
THE NO DRAIN SEQUENCE.....70
THE NO WASH SEQUENCE.....66
THE PREWASH SEQUENCE.....45
THE RINSE SEQUENCE.....53
THE SOAK SEQUENCE.....59
THE SPRAY SEQUENCE 64,116
THE STATIC DRAIN SEQUENCE.....71
THE TUMBLE SEQUENCE.....10
THE WASH SEQUENCE.....48
THT TIME OUT.....114
TOO HOT.....78,92,110
TOP SOAP HOPPER AND FRONT SOAP
HOPPER WASHING MACHINES.....9
TOP SOAP HOPPER WASHING
MACHINES
.....11,46,49,53,56,57,59,60,62,64,72
TOTAL N OF INLETS 2,31
TROUBLESHOOTING.....91

U

UNBALANCE 77
UNDEFINED FREQUENCY INVERTER
ERROR CODE..... 113

V

VERIFICATION FAULT INVERTER 115
VIEW A PROGRAM..... 39
VIEW A STEP..... 42
VIEW FAULT MESSAGES..... 97
VIEW FAULT STATISTICS 98
VIEW INPUT STATES..... 99
VIEW STEP 42

W

WAIT FOR TEMP..... 24
WAIT STATE 78
WALL MODEL.....33,34,100
WARNINGS AND SYMBOLS 3
WASH 44, 74
WASH ACTION..... 82
WASH PROGRAM 1: HOT WASH - 90°C... 83
WASH PROGRAM 10: BADLY SOILED
– POLYESTER / COTON - WHITE - 90°C
..... 87
WASH PROGRAM 11: BADLY SOILED –
POLYESTER / COTON - 60°C..... 88
WASH PROGRAM 12: WHITE JAVEL
BLEACH – 90°C 88
WASH PROGRAM 13: WHITE PEROXY
BLEACH – 90°C 89
WASH PROGRAM 14: EXTRACTION -
LOW SPEED..... 89
WASH PROGRAM 15: EXTRACTION -
HIGH SPEED 89
WASH PROGRAM 2: WARM WASH –
60°C 83
WASH PROGRAM 3: COLOURED WASH
– 40°C 84
WASH PROGRAM 4: BRIGHT
COLOURED WASH – 30°C 84
WASH PROGRAM 5: WOOLLENS –
15°C 85
WASH PROGRAM 6: LIGHTLY SOILED -
HOT WASH - 90°C NO PREWASH..... 85
WASH PROGRAM 7: LIGHTLY SOILED -
WARM WASH..... 86
WASH PROGRAM 8: LIGHTLY SOILED -
COLOURED WASH - 40°C NO
PREWASH 86
WASH PROGRAM 9: BADLY SOILED –
POLYESTER / COTON - COLOURED -
90°C 87
WASH PROGRAMS..... 83
WASH PROGRAMS FOR X-MACHINES
..... 90
WASH TIME 74
WATER FILL PROCESS..... 76
WATER INLETS (VALVES)..... 82
WATER LEVEL 12,82
WATER RECYCLING.....12,81,117
WATCH DOG..... 123
WET CLEANING..... 12,34
WRONG SOFTWARE VERSION..... 115

IMPORTANT !

MACHINE TYPE:	
PROGRAMMER: **FULL CONTROL TIMER MCB FC**	
INSTALLATION DATE:	
INSTALLATION CARRIED OUT BY:	
SERIAL NUMBER:	

ELECTRICAL DETAILS:
.....VOLT.....PHASE.....HZ

NOTE:

ANY CONTACTS WITH YOUR DEALER REGARDING MACHINE SAFETY, OR SPARE PARTS, MUST INCLUDE THE ABOVE IDENTIFICATION.

MAKE CERTAIN TO KEEP THIS MANUAL IN A SECURE PLACE FOR FUTURE REFERENCE.

DEALER: